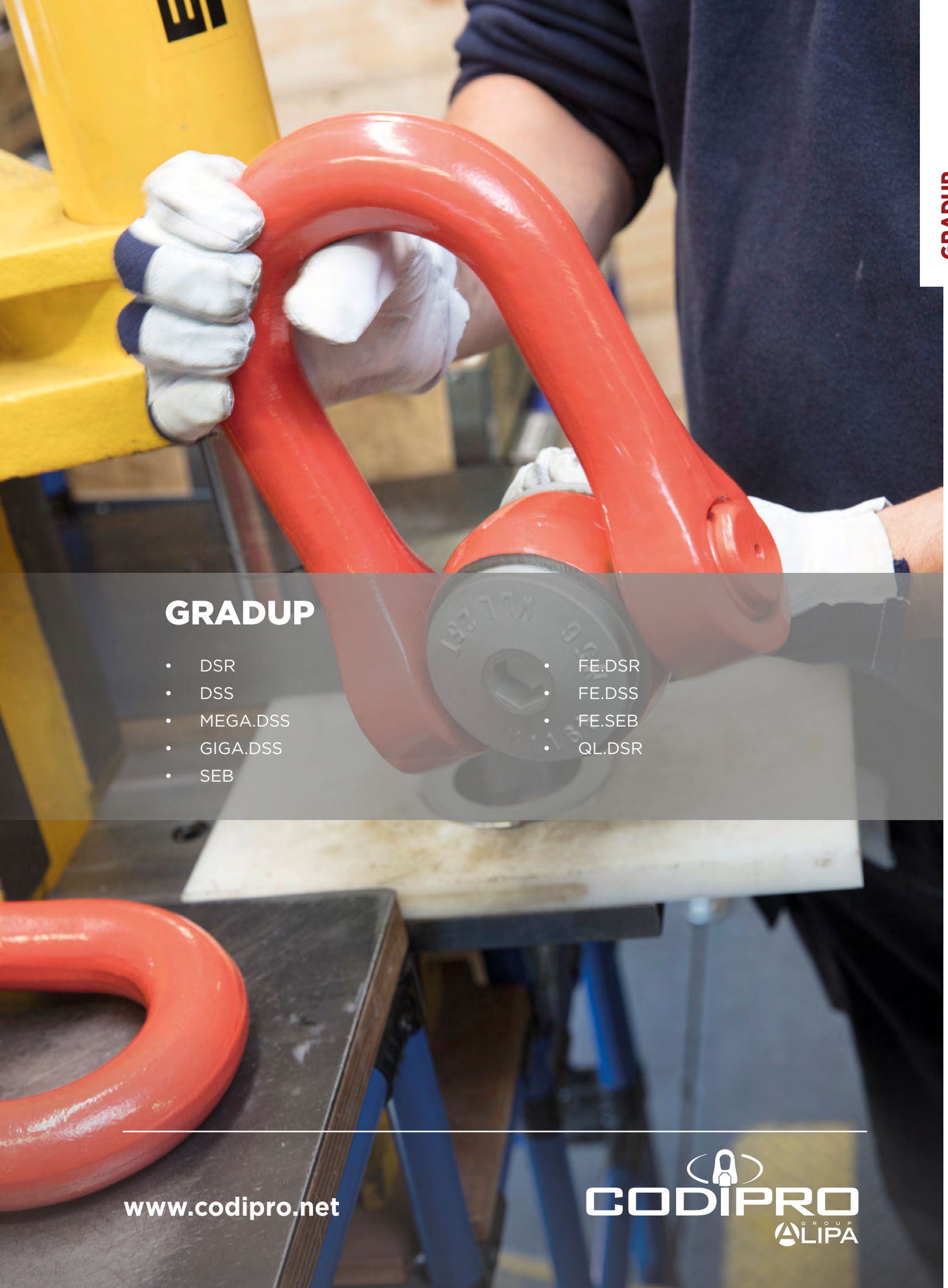

GRADUP

- DSR
- DSS
- MEGA.DSS
- GIGA.DSS
- SEB
- FE.DSR
- FE.DSS
- FE.SEB
- QL.DSR

www.codipro.net

CODIPRO GROUP ALIPA

DSR

Gradup

DOUBLE SWIVEL RING

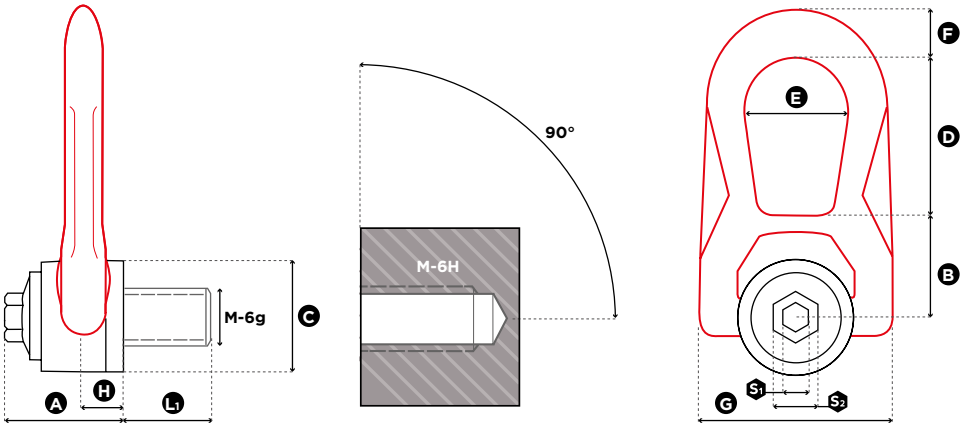

1 in = 25.4 mm

Reference	Diameter	SF 5:1 WLL (t)	SF 4:1 WLL (t)	Standard L_1 (mm)	Torque (Nm)	S_1 (mm)	S_2 (mm)	A (mm)	B (mm)	C (mm)	D (mm)	E (mm)	F (mm)	G (mm)	H (mm)	Weight (kg)
DSR M 5 UP	M 5 (x0,8)	**0,07**	**0,10**	15	3	8	16	33	30	30	38	27	14	53	9,5	0,3
DSR M 6 UP	M 6 (x1)	**0,15**	**0,20**	15	4	8	16	33	30	30	38	27	14	53	9,5	0,3
DSR M 8 UP	M 8 (x1,25)	**0,40**	**0,50**	15	6	8	16	33	30	30	38	27	14	53	9,5	0,3
DSR M 10 UP	M 10 (x1,5)	**0,70**	**0,90**	18	10	8	16	33	30	30	38	27	14	53	9,5	0,3
DSR M 12 UP	M 12 (x1,75)	**1,05**	**1,30**	21	15	8	16	33	30	30	38	27	14	53	9,5	0,3
DSR M 14 UP	M 14 (x2)	**1,40**	**1,80**	23	30	8	20	45	40	45	53	38	17	76	13	0,9
DSR M 16 UP	M 16 (x2)	**2,00**	**2,30**	27	50	8	20	45	40	45	53	38	17	76	13	0,9
DSR M 18 UP	M 18 (x2,5)	**2,30**	**2,30**	27	70	8	20	45	40	45	53	38	17	76	13	0,9
DSR M 20 2t5 UP	M 20 (x2,5)	**2,50**	**2,50**	30	100	8	20	45	40	45	53	38	17	76	13	0,9
DSR M 20 3t2 UP	M 20 (x2,5)	**2,90**	**3,20**	25	100	14	24	62	55	60	83	55	25	115	19	2,6
DSR M 22 UP	M 22 (x2,5)	**3,50**	**4,50**	33	120	14	24	62	55	60	83	55	25	115	19	2,6
DSR M 24 UP	M 24 (x3)	**4,40**	**5,50**	36	160	14	24	62	55	60	83	55	25	115	19	2,6
DSR M 27 UP	M 27 (x3)	**5,70**	**6,00**	40	200	14	24	62	55	60	83	55	25	115	19	2,7
DSR M 30 6t3 UP	M 30 (x3,5)	**6,00**	**6,30**	45	250	14	24	62	55	60	83	55	25	115	19	2,7
DSR M 30 8t UP	M 30 (x3,5)	**6,70**	**8,00**	45	250	14	30	80	77	78	98	71	26	141	28	5,4
DSR M 36 UP	M 36 (x4)	**8,00**	**8,50**	54	320	14	30	80	77	78	98	71	26	141	28	5,4
DSR M 42 UP	M 42 (x4,5)	**8,50**	**9,00**	63	400	14	30	80	77	78	98	71	26	141	28	5,5

CODIPRO ALIPA
www.codipro.net - info@codipro.net
25, Salzbaach – LU-9559 WILTZ – Tel.: +352 26 81 54 1 - Fax: +352 81 05 17

DSR

Gradup

DOUBLE SWIVEL RING

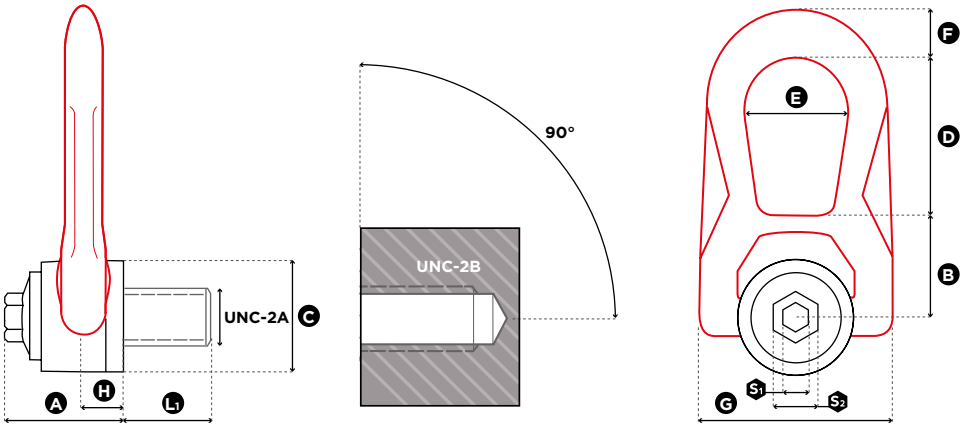

1 in = 25.4 mm

Reference	Diameter	SF 5:1 WLL (lbs)	SF 4:1 WLL (lbs)	Standard L_1 (mm)	Torque (ft-lb)	S_1 (mm)	S_2 (mm)	A (mm)	B (mm)	C (mm)	D (mm)	E (mm)	F (mm)	G (mm)	H (mm)	Weight (kg)
DSR U 025 UP	UNC 1/4''-20	**330**	**450**	13	3	8	16	32	30	30	38	27	14	53	9,5	0,3
DSR U 516 UP	UNC 5/16''-18	**1,000**	**1,200**	15	5	8	16	33	30	30	38	27	14	53	9,5	0,3
DSR U 038 UP	UNC 3/8"-16	**1,300**	**1,600**	17	8	8	16	33	30	30	38	27	14	53	9,5	0,3
DSR U 050 UP	UNC 1/2"-13	**2,400**	**2,800**	21	12	8	16	33	30	30	38	27	14	53	9,5	0,3
DSR U 058 UP	UNC 5/8"-11	**3,900**	**4,900**	27	40	8	20	45	40	45	53	38	17	76	13	0,9
DSR U 075 UP	UNC 3/4"-10	**5,250**	**5,250**	30	80	8	20	45	40	45	53	38	17	76	13	0,9
DSR U 078 UP	UNC 7/8"-9	**7,900**	**9,800**	33	90	14	24	62	55	60	83	55	25	115	19	2,5
DSR U 100 UP	UNC 1"-8	**11,200**	**12,500**	36	125	14	24	62	55	60	83	55	25	115	19	2,6
DSR U 118 UP	UNC 1" 1/8-7	**11,500**	**13,000**	42	160	14	24	62	55	60	83	55	25	115	19	2,6
DSR U 125 UP	UNC 1" 1/4-7	**13,500**	**13,500**	45	200	14	24	62	55	60	83	55	25	115	19	2,7

CODIPRO
ALIPA
www.codipro.net - info@codipro.net
25, Salzbaach – LU-9559 WILTZ – Tel.: +352 26 81 54 1 - Fax: +352 81 05 17

DSS

Gradup

DOUBLE SWIVEL SHACKLE

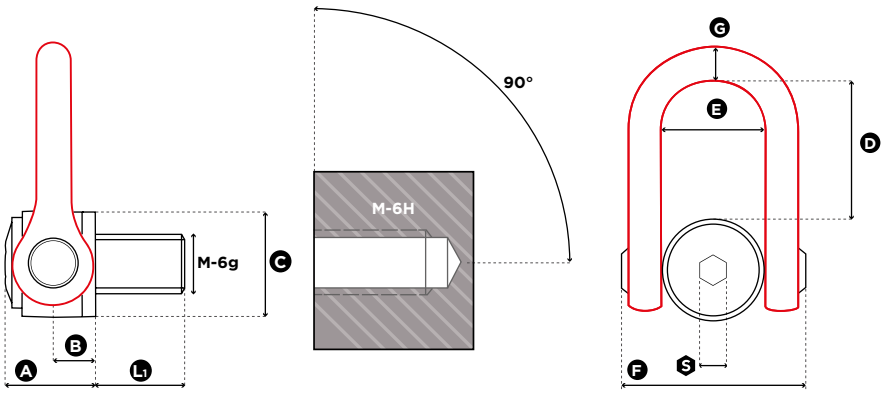

1 in = 25.4 mm

Reference	Diameter	SF 5:1 WLL (t)	SF 4:1 WLL (t)	Standard L_1 (mm)	Torque (Nm)	S (mm)	A (mm)	B (mm)	C (mm)	D (mm)	E (mm)	F (mm)	G (mm)	Weight (kg)
DSS M 24 UP	M 24 (x3)	**4,50**	**5,50**	36	160	19	61	31	70	98	73	149	33	5,4
DSS M 30 UP	M 30 (x3,5)	**7,70**	**8,50**	45	250	19	61	31	70	98	73	149	33	5,5
DSS M 33 UP	M 33 (x3,5)	**8,50**	**10,50**	50	250	19	61	31	70	98	73	149	33	5,5
DSS M 36 UP	M 36 (x4)	**11,00**	**12,00**	54	320	19	61	31	70	98	73	149	33	5,5
DSS M 36x3 UP	M 36 (x3)	**11,00**	**12,00**	54	320	19	61	31	70	98	73	149	33	5,5
DSS M 39 UP	M 39 (x4)	**12,00**	**14,00**	58	320	19	61	31	70	98	73	149	33	5,7
DSS M 42 UP	M 42 (x4,5)	**13,00**	**15,00**	63	400	19	61	31	70	98	73	149	33	5,8
DSS M 42x3 UP	M 42 (x3)	**13,00**	**15,00**	63	400	19	61	31	70	98	73	149	33	5,8
DSS M 45 UP	M 45 (x4,5)	**14,50**	**16,00**	63	400	19	61	31	70	98	73	149	33	5,9
DSS M 48 UP	M 48 (x5)	**17,00**	**20,00**	68	600	19	79	38	90	123	91	182	45	11,0
DSS M 48x3 UP	M 48 (x3)	**17,00**	**20,00**	68	600	19	79	38	90	123	91	182	45	11,0
DSS M 48x4 UP	M 48 (x4)	**17,00**	**20,00**	68	600	19	79	38	90	123	91	182	45	11,0
DSS M 52 UP	M 52 (x5)	**19,00**	**21,00**	68	600	19	79	38	90	123	91	182	45	11,2
DSS M 56 UP	M 56 (x5,5)	**22,00**	**25,00**	78	600	19	79	38	90	123	91	182	45	11,3
DSS M 56x4 UP	M 56 (x4)	**22,00**	**25,00**	78	600	19	79	38	90	123	91	182	45	11,4
DSS M 64 UP	M 64 (x6)	**25,00**	**32,10**	90	600	19	79	38	95	123	91	182	45	12,2
DSS M 64x4 UP	M 64 (x4)	**25,00**	**32,10**	90	600	19	79	38	95	123	91	182	45	12,2
DSS M 72 UP	M 72 (x6)	**22,00**	**25,00**	90	600	19	79	38	95	123	91	182	45	14,0
DSS M 72x4 UP	M 72 (x4)	**22,00**	**25,00**	90	600	19	79	38	95	123	91	182	45	14,0
DSS M 80 UP	M 80 (x6)	**25,00**	**32,10**	90	600	19	79	38	100	123	91	182	45	15,0
DSS M 90 UP	M 90 (x6)	**25,00**	**32,10**	90	600	19	79	38	100	123	91	182	45	15,5
DSS M 100 UP	M 100 (x6)	**25,00**	**32,10**	90	600	19	79	38	110	123	91	182	45	16,5

CODIPRO ALIPA
www.codipro.net - info@codipro.net
25, Salzbaach – LU-9559 WILTZ – Tel.: +352 26 81 54 1 - Fax: +352 81 05 17

DSS

Gradup

DOUBLE SWIVEL SHACKLE

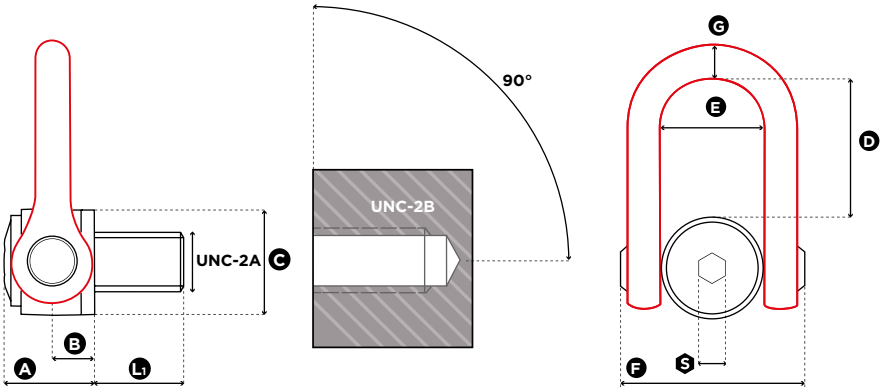

1 in = 25.4 mm

Reference	Diameter	SF 5:1 WLL (lbs)	SF 4:1 WLL (lbs)	Standard L_1 (mm)	Torque (ft-lb)	S (mm)	A (mm)	B (mm)	C (mm)	D (mm)	E (mm)	F (mm)	G (mm)	Weight (kg)
DSS U 100 UP	UNC 1''-8	**10,000**	**13,000**	36	125	19	61	31	70	98	73	149	33	5,4
DSS U 125 UP	UNC 1" 1/4-7	**15,000**	**19,000**	45	200	19	61	31	70	98	73	149	33	5,4
DSS U 138 UP	UNC 1" 3/8-6	**21,000**	**22,000**	54	240	19	61	31	70	98	73	149	33	5,4
DSS U 150 UP	UNC 1" 1/2-6	**22,000**	**27,000**	54	240	19	61	31	70	98	73	149	33	5,4
DSS U 175 UP	UNC 1" 3/4-5	**27,000**	**33,000**	63	300	19	61	31	70	98	73	149	33	5,9
DSS U 200 UP	UNC 2"-4,5	**38,000**	**50,000**	76	450	19	79	38	90	123	91	182	45	11,1
DSS U 250 UP	UNC 2" 1/2-4	**48,500**	**55,000**	90	450	19	79	38	95	123	91	182	45	12,2

CODIPRO
ALIPA
www.codipro.net - info@codipro.net
25, Salzbaach – LU-9559 WILTZ – Tel.: +352 26 81 54 1 - Fax: +352 81 05 17

MEGA.DSS

MEGA DOUBLE SWIVEL SHACKLE

Gradup

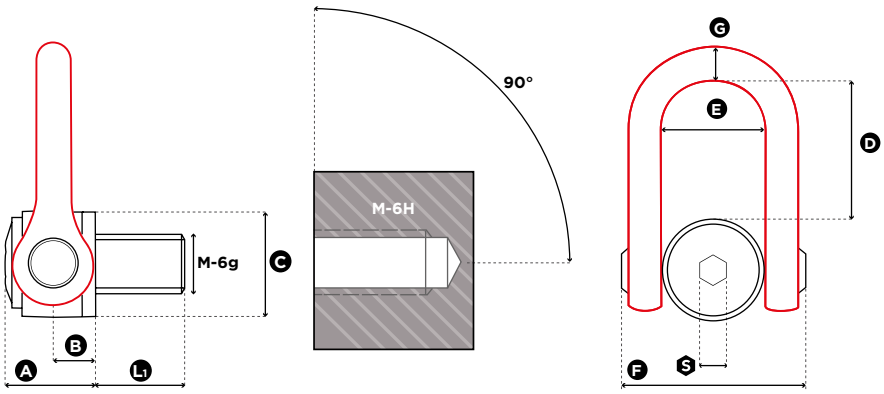

1 in = 25.4 mm

Reference	Diameter	SF 5:1 WLL (t)	SF 4:1 WLL (t)	Standard L1 (mm)	Torque (Nm)	S (mm)	A (mm)	B (mm)	C (mm)	D (mm)	E (mm)	F (mm)	G (mm)	Weight (kg)
MEGA.DSS M 64 UP	M 64 (x6)	**26,00**	**33,00**	100	600	36	127	64	140	186	143	278	69	42,0
MEGA.DSS M 72 UP	M 72 (x6)	**28,00**	**35,00**	110	700	36	127	64	140	186	143	278	69	43,0
MEGA.DSS M 72x4 UP	M 72 (x4)	**28,00**	**35,00**	110	700	36	127	64	140	186	143	278	69	43,0
MEGA.DSS M 80 UP	M 80 (x6)	**32,00**	**40,00**	120	800	36	127	64	140	186	143	278	69	44,5
MEGA.DSS M 90 UP	M 90 (x6)	**36,00**	**45,00**	135	900	36	127	64	140	186	143	278	69	46,5
MEGA.DSS M 100 UP	M 100 (x6)	**48,00**	**60,00**	150	1000	36	127	64	140	186	143	278	69	49,0

CODIPRO
ALIPA
www.codipro.net - info@codipro.net
25, Salzbaach – LU-9559 WILTZ – Tel.: +352 26 81 54 1 - Fax: +352 81 05 17

MEGA.DSS

MEGA DOUBLE SWIVEL SHACKLE

Gradup

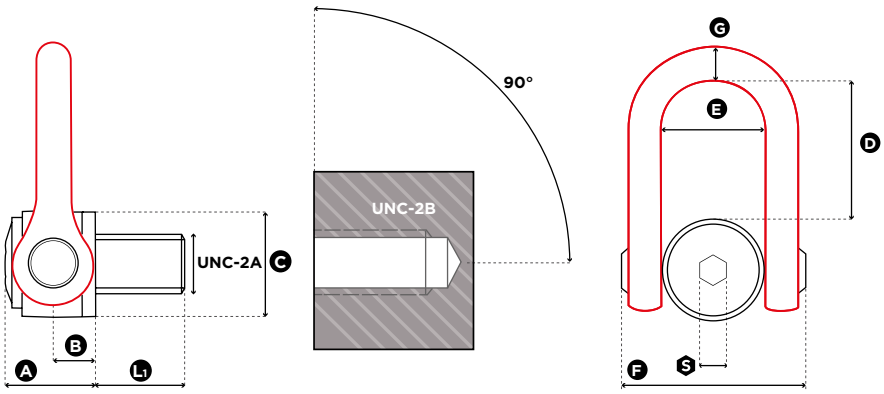

1 in = 25.4 mm

Reference	Diameter	SF 5:1 WLL (lbs)	SF 4:1 WLL (lbs)	Standard L_1 (mm)	Torque (ft-lb)	S (mm)	A (mm)	B (mm)	C (mm)	D (mm)	E (mm)	F (mm)	G (mm)	Weight (kg)
MEGA.DSS U 275 UP	UNC 2" 3/4-4	**60,000**	**75,000**	105	520	36	127	64	140	186	143	278	69	42,5
MEGA.DSS U 300 UP	UNC 3" -4	**64,000**	**80,000**	115	520	36	127	64	140	186	143	278	69	43,0
MEGA.DSS U 325 UP	UNC 3" 1/4-4	**72,000**	**90,000**	125	590	36	127	64	140	186	143	278	69	44,5
MEGA.DSS U 350 UP	UNC 3" 1/2-4	**76,000**	**95,000**	135	665	36	127	64	140	186	143	278	69	46,0
MEGA.DSS U 375 UP	UNC 3" 3/4-4	**80,000**	**100,000**	145	740	36	127	64	140	186	143	278	69	47,0
MEGA.DSS U 400 UP	UNC 4" -4	**88,000**	**110,000**	150	740	36	127	64	140	186	143	278	69	49,0

CODIPRO
ALIPA
www.codipro.net - info@codipro.net
25, Salzbaach – LU-9559 WILTZ – Tel.: +352 26 81 54 1 - Fax: +352 81 05 17

GIGA.DSS
GIGA.DSS+Q

GIGA DOUBLE SWIVEL SHACKLE

Gradup

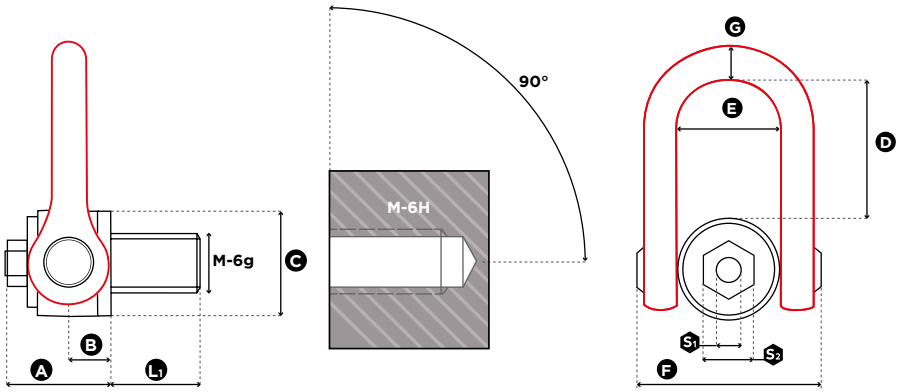

1 in = 25.4 mm

Reference	Diameter	SF 5:1 WLL (t)	Standard L1 (mm)	Torque (Nm)	S1 (mm)	S2 (mm)	A (mm)	B (mm)	C (mm)	D (mm)	E (mm)	F (mm)	G (mm)	Weight (kg)
GIGA.DSS M 150 UP	M 150 (x6)	**125,00**	228	2000	41	105	271	115	290	353	302	544	103	268

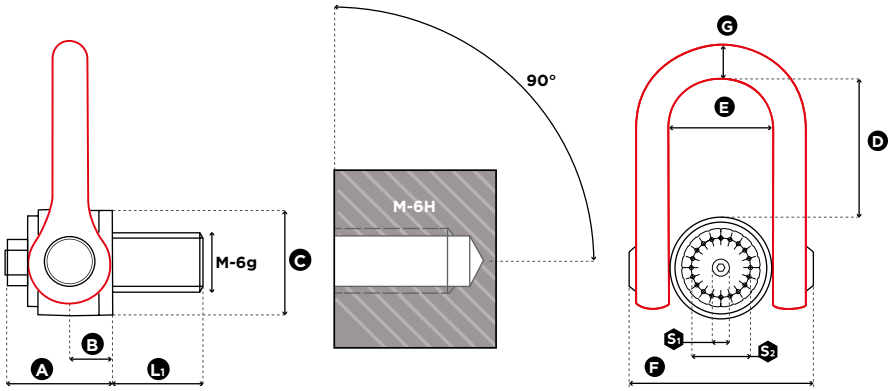

1 in = 25.4 mm

Reference	Diameter	SF 5:1 WLL (t)	Standard L1 (mm)	Torque (Nm)	S1 (mm)	S2 (mm)	A (mm)	B (mm)	C (mm)	D (mm)	E (mm)	F (mm)	G (mm)	Weight (kg)
GIGA.DSS+Q M 150 UP	M 150 (x6)	**125,00**	230	160	21	XZN N12 DIN 34824	267	115	290	353	302	544	103	268

CODIPRO ALIPA
www.codipro.net - info@codipro.net
25, Salzbaach – LU-9559 WILTZ – Tel.: +352 26 81 54 1 - Fax: +352 81 05 17

SEB

Gradup

SWIVEL EYE BOLT

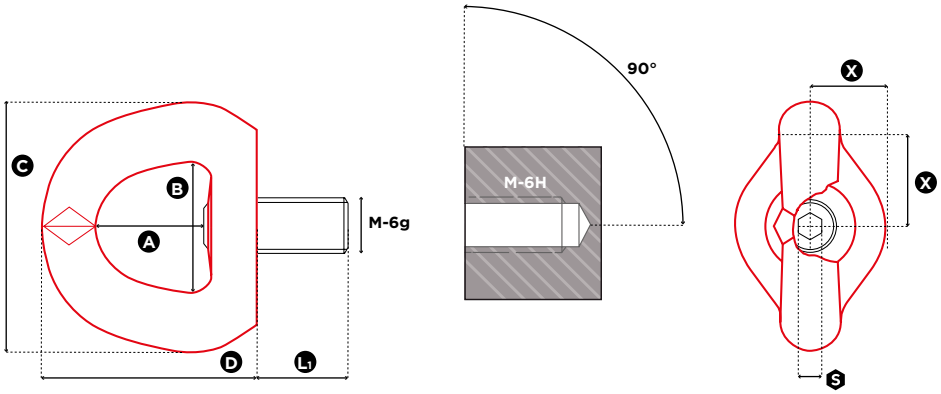

1 in = 25.4 mm

Reference	Diameter	SF 5:1 WLL (t)	SF 4:1 WLL (t)	Standard L1 (mm)	Torque (Nm)	X	S (mm)	A (mm)	B (mm)	C (mm)	D (mm)	Weight (kg)
SEB M 8 UP	M 8 (x1,25)	**0,40**	**0,50**	14	6	20	6	30	34	60	57	0,24
SEB M 10 UP	M 10 (x1,5)	**0,50**	**0,70**	17	10	20	6	30	34	60	57	0,24
SEB M 12 UP	M 12 (x1,75)	**0,80**	**0,90**	21	15	20	6	30	34	60	57	0,24
SEB M 16 UP	M 16 (x2)	**1,40**	**1,80**	27	50	35	8	38	45	88	80	0,8
SEB M 20 UP	M 20 (x2,5)	**2,00**	**2,70**	30	100	35	8	38	45	88	80	0,8
SEB M 24 3t8 UP	M 24 (x3)	**3,20**	**3,80**	36	160	35	14	38	45	88	80	0,8
SEB M 24 4t2 UP	M 24 (x3)	**3,40**	**4,20**	36	160	50	14	58	70	115	106	2,6
SEB M 30 UP	M 30 (x3,5)	**5,50**	**6,30**	45	250	50	14	58	70	115	106	2,7
SEB M 36 UP	M 36 (x4)	**9,00**	**11,00**	54	320	70	14	83	94	168	155	7,0
SEB M 42 UP	M 42 (x4,5)	**12,00**	**15,00**	63	400	70	14	83	94	168	155	7,0
SEB M 48 UP	M 48 (x5)	**15,00**	**16,00**	68	600	70	19	80	94	168	155	7,0

CODIPRO
ALIPA
www.codipro.net - info@codipro.net
25, Salzbaach – LU-9559 WILTZ – Tel.: +352 26 81 54 1 - Fax: +352 81 05 17

SEB

Gradup

SWIVEL EYE BOLT

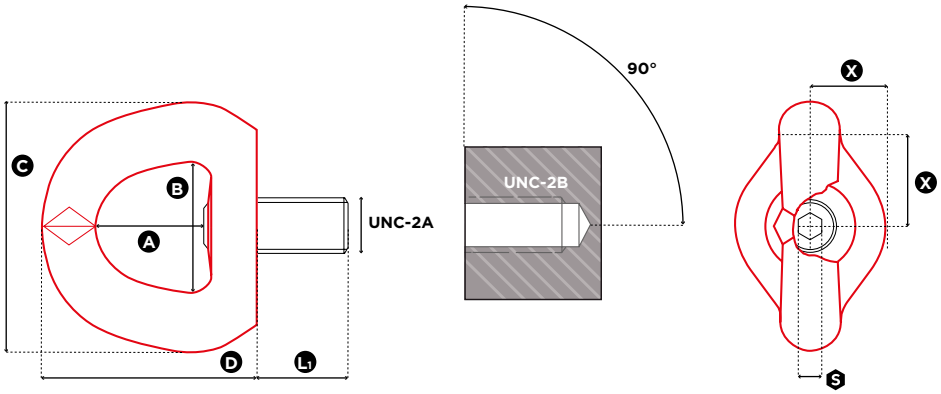

1 in = 25.4 mm

Reference	Diameter	SF 5:1 WLL (lbs)	SF 4:1 WLL (lbs)	Standard L_1 (mm)	Torque (ft-lb)	X	S (mm)	A (mm)	B (mm)	C (mm)	D (mm)	Weight (kg)
SEB U 038 UP	UNC 3/8"-16	**1,200**	**1,500**	17	8	20	6	30	34	60	57	0,24
SEB U 050 UP	UNC 1/2"-13	**1,800**	**1,950**	21	12	20	6	30	34	60	57	0,24
SEB U 058 UP	UNC 5/8"-11	**3,200**	**4,000**	27	40	35	8	38	45	88	80	0,8
SEB U 075 UP	UNC 3/4"-10	**4,750**	**5,900**	30	80	35	8	38	45	88	80	0,8
SEB U 100 UP	UNC 1"-8	**7,500**	**9,300**	36	125	50	14	58	70	115	106	2,6
SEB U 125 UP	UNC 1" 1/4-7	**12,200**	**13,800**	45	200	70	14	58	70	115	106	2,8
SEB U 150 UP	UNC 1" 1/2-6	**20,000**	**25,000**	62	240	70	14	83	94	168	155	7,0
SEB U 200 UP	UNC 2"-4,5	**33,000**	**35,200**	70	450	70	19	83	94	168	155	7,3

CODIPRO
ALIPA
www.codipro.net - info@codipro.net
25, Salzbaach – LU-9559 WILTZ – Tel.: +352 26 81 54 1 - Fax: +352 81 05 17

FE.DSR

Gradup

FEMALE DOUBLE SWIVEL RING

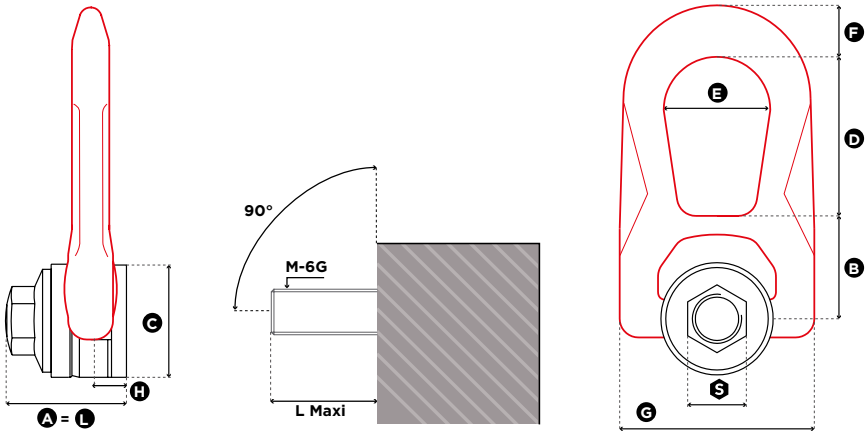

1 in = 25.4 mm

Reference	Diameter	SF 5:1 WLL (t)	SF 4:1 WLL (t)	L Maxi (mm)	Torque (Nm)	S (mm)	A (mm)	B (mm)	C (mm)	D (mm)	E (mm)	F (mm)	G (mm)	H (mm)	Weight (kg)
FE.DSR M 8 UP	M 8 (x1,25)	**0,40**	**0,50**	45	6	20	45	40	45	53	38	17	76	13	0,9
FE.DSR M 10 UP	M 10 (x1,5)	**0,70**	**0,90**	45	10	20	45	40	45	53	38	17	76	13	0,9
FE.DSR M 12 UP	M 12 (x1,75)	**1,05**	**1,30**	45	15	20	45	40	45	53	38	17	76	13	0,9
FE.DSR M 14 UP	M 14 (x2)	**1,40**	**1,80**	45	30	20	45	40	45	53	38	17	76	13	0,9
FE.DSR M 16 UP	M 16 (x2)	**2,00**	**2,30**	45	50	20	45	40	45	53	38	17	76	13	0,9
FE.DSR M 18 UP	M 18 (x2,5)	**2,30**	**2,30**	62	70	24	62	55	60	83	55	25	115	19	2,6
FE.DSR M 20 UP	M 20 (x2,5)	**2,50**	**2,50**	62	100	24	62	55	60	83	55	25	115	19	2,6
FE.DSR M 22 UP	M 22 (x2,5)	**3,50**	**4,50**	62	120	24	62	55	60	83	55	25	115	19	2,6

CODIPRO
ALIPA
www.codipro.net - info@codipro.net
25, Salzbaach – LU-9559 WILTZ – Tel.: +352 26 81 54 1 - Fax: +352 81 05 17

FE.DSR

FEMALE DOUBLE SWIVEL RING

Gradup

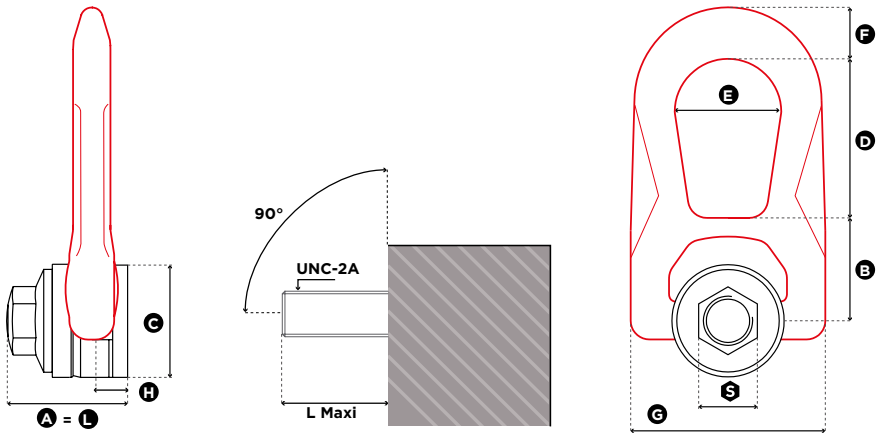

1 in = 25.4 mm

Reference	Diameter	SF 5:1 WLL (lbs)	SF 4:1 WLL (lbs)	L Maxi (mm)	Torque (Nm)	S (mm)	A (mm)	B (mm)	C (mm)	D (mm)	E (mm)	F (mm)	G (mm)	H (mm)	Weight (kg)
FE.DSR U 025 UP	UNC 1/4''-20	**330**	**450**	45	3	20	45	40	45	53	38	17	76	13	0,9
FE.DSR U 516 UP	UNC 5/16''-18	**1,000**	**1,200**	45	5	20	45	40	45	53	38	17	76	13	0,9
FE.DSR U 038 UP	UNC 3/8''-16	**1,300**	**1,600**	45	8	20	45	40	45	53	38	17	76	13	0,9
FE.DSR U 050 UP	UNC 1/2''-13	**2,400**	**2,800**	45	12	20	45	40	45	53	38	17	76	13	0,9
FE.DSR U 058 UP	UNC 5/8''-11	**3,900**	**4,900**	45	40	20	45	40	45	53	38	17	76	13	0,9
FE.DSR U 075 UP	UNC 3/4''-10	**5,250**	**5,250**	62	80	24	62	55	60	83	55	25	115	19	2,6
FE.DSR U 078 UP	UNC 7/8''-9	**7,900**	**9,800**	62	90	24	62	55	60	83	55	25	115	19	2,6

CODIPRO
ALIPA
www.codipro.net - info@codipro.net
25, Salzbaach – LU-9559 WILTZ – Tel.: +352 26 81 54 1 - Fax: +352 81 05 17

FE.DSS

Gradup

FEMALE DOUBLE SWIVEL SHACKLE

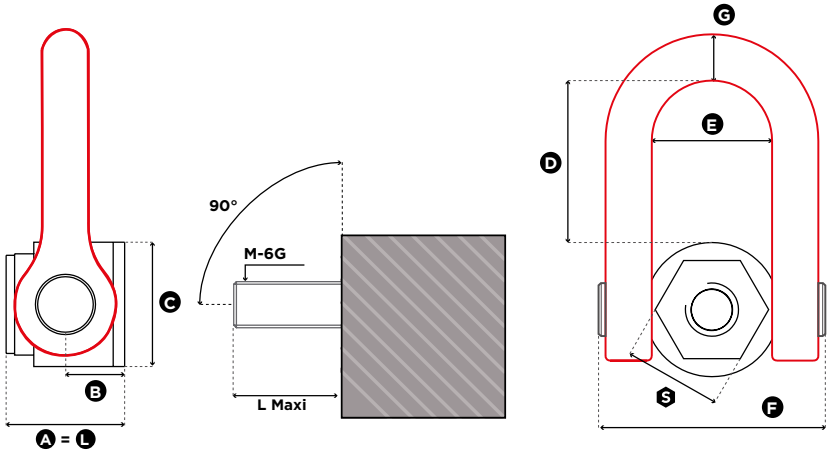

1 in = 25.4 mm

Reference	Diameter	SF 5:1 WLL (t)	SF 4:1 WLL (t)	L Maxi (mm)	Torque (Nm)	S (mm)	A (mm)	B (mm)	C (mm)	D (mm)	E (mm)	F (mm)	G (mm)	Weight (kg)
FE.DSS M 24 UP	M 24 (x3)	**4,50**	**5,50**	66	160	50	66	31	70	98	73	149	33	5,1
FE.DSS M 27 UP	M 27 (x3)	**5,20**	**6,50**	66	200	50	66	31	70	98	73	149	33	5,1
FE.DSS M 30 UP	M 30 (x3,5)	**7,50**	**8,50**	66	250	50	66	31	70	98	73	149	33	5,1
FE.DSS M 33 UP	M 33 (x3,5)	**8,00**	**10,50**	66	250	50	66	31	70	98	73	149	33	5,1
FE.DSS M 36 UP	M 36 (x4)	**10,00**	**12,00**	66	320	50	66	31	70	98	73	149	33	5,1
FE.DSS M 39 UP	M 39 (x4)	**12,00**	**14,00**	89	320	60	89	38	95	123	91	182	45	10,0
FE.DSS M 42 UP	M 42 (x4,5)	**13,00**	**15,00**	89	400	60	89	38	95	123	91	182	45	10,0
FE.DSS M 45 UP	M 45 (x4,5)	**14,50**	**16,00**	89	400	60	89	38	95	123	91	182	45	10,0
FE.DSS M 48 UP	M 48 (x5)	**17,00**	**20,00**	89	600	60	89	38	95	123	91	182	45	10,0
FE.DSS M 52 UP	M 52 (x5)	**19,00**	**21,00**	89	600	60	89	38	95	123	91	182	45	10,0

CODIPRO
ALIPA
www.codipro.net - info@codipro.net
25, Salzbaach – LU-9559 WILTZ – Tel.: +352 26 81 54 1 - Fax: +352 81 05 17

FE.DSS

Gradup

FEMALE DOUBLE SWIVEL SHACKLE

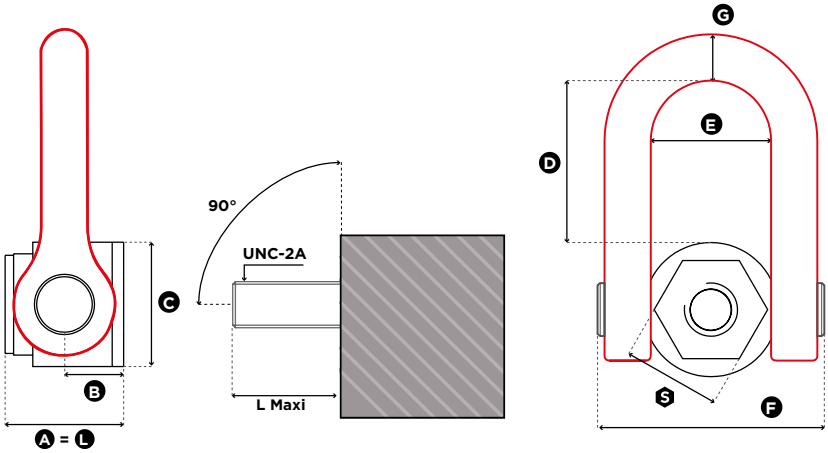

1 in = 25.4 mm

Reference	Diameter	SF 5:1 WLL (lbs)	SF 4:1 WLL (lbs)	L Maxi (mm)	Torque (Nm)	S (mm)	A (mm)	B (mm)	C (mm)	D (mm)	E (mm)	F (mm)	G (mm)	Weight (kg)
FE.DSS U 100 UP	UNC 1"-8	**10,000**	**13,000**	66	125	50	66	31	70	98	73	149	33	5,1
FE.DSS U 125 UP	UNC 1" 1/4-7	**15,000**	**19,000**	66	200	50	66	31	70	98	73	149	33	5,1
FE.DSS U 138 UP	UNC 1" 3/8-6	**21,000**	**22,000**	66	240	50	66	31	70	98	73	149	33	5,1
FE.DSS U 150 UP	UNC 1" 1/2-6	**22,000**	**27,000**	89	240	60	89	38	95	123	91	182	45	10,0
FE.DSS U 200 UP	UNC 2"-4,5	**38,000**	**50,000**	89	450	60	89	38	95	123	91	182	45	10,0

CODIPRO
ALIPA
www.codipro.net - info@codipro.net
25, Salzbaach – LU-9559 WILTZ – Tel.: +352 26 81 54 1 - Fax: +352 81 05 17

FE.SEB

Gradup

FEMALE SWIVEL EYE BOLT

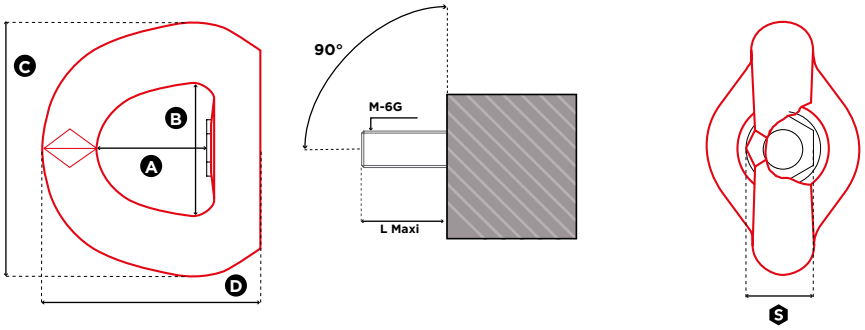

1 in = 25.4 mm

Reference	Diameter	SF 5:1 WLL (t)	SF 4:1 WLL (t)	L Maxi (mm)	Torque (Nm)	S (mm)	A (mm)	B (mm)	C (mm)	D (mm)	Weight (kg)
FE.SEB M 8 UP	M 8 (x1,25)	**0,40**	**0,50**	22	6	21	38	45	88	80	0,8
FE.SEB M 10 UP	M 10 (x1,5)	**0,50**	**0,70**	22	10	21	38	45	88	80	0,8
FE.SEB M 12 UP	M 12 (x1,75)	**0,80**	**0,90**	22	15	21	38	45	88	80	0,8
FE.SEB M 16 UP	M 16 (x2)	**1,40**	**1,80**	22	50	21	38	45	88	80	0,8
FE.SEB M 20 UP	M 20 (x2,5)	**2,00**	**2,70**	35	100	36	55	70	115	106	2,5
FE.SEB M 24 UP	M 24 (x3)	**3,40**	**4,20**	48	160	40	77	94	168	155	6,3
FE.SEB M 30 UP	M 30 (x3,5)	**5,50**	**6,30**	48	250	40	77	94	168	155	6,3
FE.SEB M 36 UP	M 36 (x4)	**9,00**	**11,00**	48	320	40	77	94	168	155	6,3

CODIPRO
ALIPA
www.codipro.net - info@codipro.net
25, Salzbaach – LU-9559 WILTZ – Tel.: +352 26 81 54 1 - Fax: +352 81 05 17

FE.SEB

FEMALE SWIVEL EYE BOLT

Gradup

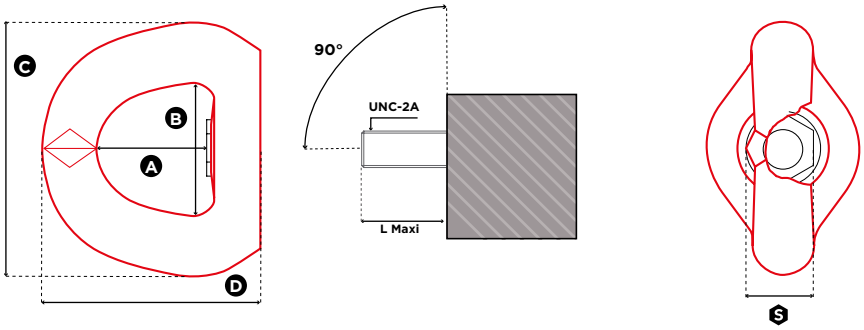

1 in = 25.4 mm

Reference	Diameter	SF 5:1 WLL (lbs)	SF 4:1 WLL (lbs)	L Maxi (mm)	Torque (ft-lb)	S (mm)	A (mm)	B (mm)	C (mm)	D (mm)	Weight (kg)
FE.SEB U 038 UP	UNC 3/8"-16	**1,200**	**1,500**	22	8	21	38	45	88	80	0,8
FE.SEB U 050 UP	UNC 1/2"-13	**1,800**	**1,950**	22	12	21	38	45	88	80	0,8
FE.SEB U 058 UP	UNC 5/8"-11	**3,200**	**4,000**	22	40	21	38	45	88	80	0,8
FE.SEB U 075 UP	UNC 3/4"-10	**4,750**	**5,900**	35	80	36	55	70	115	106	2,5
FE.SEB U 100 UP	UNC 1"-8	**7,500**	**9,300**	48	125	40	77	94	168	155	6,3
FE.SEB U 125 UP	UNC 1" 1/4-7	**12,200**	**13,800**	48	200	40	77	94	168	155	6,3

CODIPRO
www.codipro.net - info@codipro.net
25, Salzbaach – LU-9559 WILTZ – Tel.: +352 26 81 54 1 - Fax: +352 81 05 17

QL.DSR

QUICK LIFT DOUBLE SWIVEL RING

Gradup

QLR
Quick Lift Ring

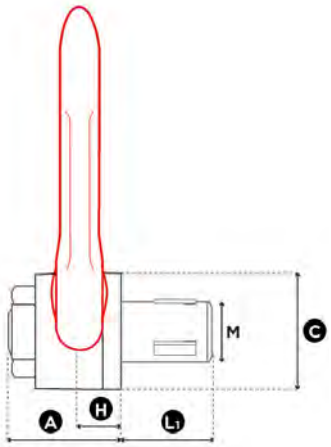

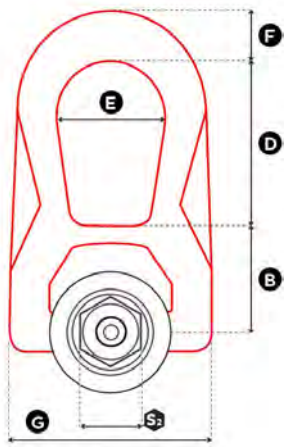

1 in = 25.4 mm

Reference	Diameter	SF 5:1 WLL (t)	Standard L_1 (mm)	Torque (Nm)	S_2 (mm)	A (mm)	B (mm)	C (mm)	D (mm)	E (mm)	F (mm)	G (mm)	H (mm)	Weight (kg)
QL.DSR M 8	M 8 (x1,25)	**0,25**	17,5	20	18	31	30	30	38	27	14	53	9,5	0,3
QL.DSR M 10	M 10 (x1,5)	**0,40**	19,5	30	18	31	30	30	38	27	14	53	9,5	0,3
QL.DSR M 12	M 12 (x1,75)	**0,65**	23	60	27	40	40	45	53	38	17	76	13	0,9
QL.DSR M 14	M 14 (x2)	**0,70**	23	80	27	40	40	45	53	38	17	76	13	0,9
QL.DSR M 16	M 16 (x2)	**1,05**	27	100	27	40	40	45	53	38	17	76	13	0,9
QL.DSR M 20	M 20 (x2,5)	**1,70**	30	160	40	55	55	60	83	55	25	115	19	2,6
QL.DSR M 24	M 24 (x3)	**2,50**	36	180	40	55	55	60	83	55	25	115	19	2,6

CODIPRO
www.codipro.net - info@codipro.net
25, Salzbaach – LU-9559 WILTZ – Tel.: +352 26 81 54 1 - Fax: +352 81 05 17

QL.DSR

QUICK LIFT DOUBLE SWIVEL RING

Gradup

QLR
Quick Lift Ring

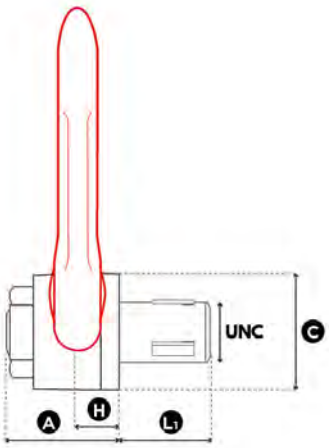

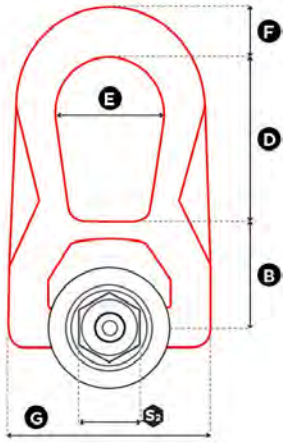

1 in = 25.4 mm

Reference	Diameter	SF 5:1 WLL (lbs)	Standard L_1 (mm)	Torque (ft-lb)	S_2 (mm)	A (mm)	B (mm)	C (mm)	D (mm)	E (mm)	F (mm)	G (mm)	H (mm)	Weight (kg)
QL.DSR U 050	UNC 1/2"-13	**1,300***	23	*	27	40	40	45	53	38	17	76	13	0,9
QL.DSR U 075	UNC 3/4"-10	**3,400***	30	*	40	55	55	60	83	55	25	115	19	2,6
QL.DSR U 100	UNC 1"-8	**5,000***	36	*	40	55	55	60	83	55	25	115	19	2,6

* In certification process / En cours d'homologation / In Entwicklungsphase / En proceso de homologación

CODIPRO
www.codipro.net - info@codipro.net
25, Salzbaach – LU-9559 WILTZ – Tel.: +352 26 81 54 1 - Fax: +352 81 05 17

STAINLESS STEEL

STAINLESS STEEL / ACIER INOXYDABLE / EDELSTAHL / ACERO INOXIDABLE

- SS.DSR
- SS.DSS
- SS.SEB
- SS.FE.DSR
- SS.FE.DSS
- SS.QL.DSR

www.codipro.net

CODIPRO GROUP ALIPA

SS.DSR

STAINLESS STEEL DOUBLE SWIVEL RING

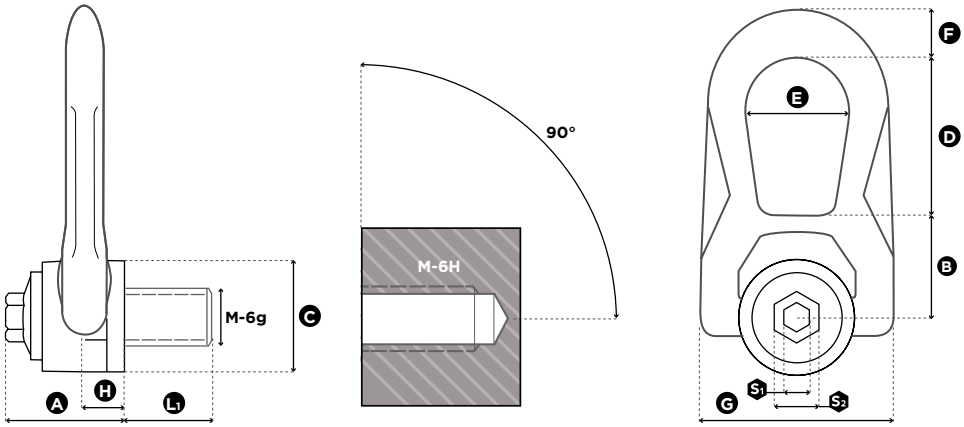

1 in = 25.4 mm

Reference	Diameter	SF 5:1 WLL (t)	SF 4:1 WLL (t)	Standard L_1 (mm)	Torque (Nm)	S_1 (mm)	S_2 (mm)	A (mm)	B (mm)	C (mm)	D (mm)	E (mm)	F (mm)	G (mm)	H (mm)	Weight (kg)
SS.DSR M 6	M 6 (x1)	**0,10**	**0,15**	15	4	8	16	32	30	30	39	28	13	53	9,5	0,3
SS.DSR M 8	M 8 (x1,25)	**0,30**	**0,30**	16	6	8	16	32	30	30	39	28	13	53	9,5	0,3
SS.DSR M 10	M 10 (x1,50)	**0,50**	**0,50**	16	10	8	16	32	30	30	39	28	13	53	9,5	0,3
SS.DSR M 12	M 12 (x1,75)	**0,80**	**0,80**	19	15	8	16	32	30	30	39	28	13	53	9,5	0,3
SS.DSR M 14	M 14 (x2)	**1,00**	**1,00**	29	30	8	20	44	40	45	53	38	17	76	13	0,9
SS.DSR M 16	M 16 (x2)	**1,40**	**1,50**	26	50	8	20	44	40	45	53	38	17	76	13	0,9
SS.DSR M 18	M 18 (x2,5)	**1,40**	**1,50**	30	70	8	20	44	40	45	53	38	17	76	13	1,0
SS.DSR M 20	M 20 (x2,5)	**1,40**	**1,60**	30	100	8	20	44	40	45	53	38	17	76	13	1,0
SS.DSR M 22	M 22 (x2,5)	**2,20**	**2,20**	42	120	14	24	62	55	58	83	56	25	115	19	2,5
SS.DSR M 24	M 24 (x3)	**2,70**	**2,70**	42	160	14	24	62	55	58	83	56	25	115	19	2,6
SS.DSR M 27	M 27 (x3)	**2,80**	**2,90**	42	200	14	24	62	55	58	83	56	25	115	19	2,7
SS.DSR M 30	M 30 (x3,5)	**3,00**	**3,50**	47	250	14	24	62	55	58	83	56	25	115	19	2,8

CODIPRO
ALIPA
www.codipro.net - info@codipro.net
25, Salzbaach – L-9559 WILTZ – Tel.: +352 26 81 54 1 - Fax: +352 81 05 17

SS.DSR

STAINLESS STEEL DOUBLE SWIVEL RING

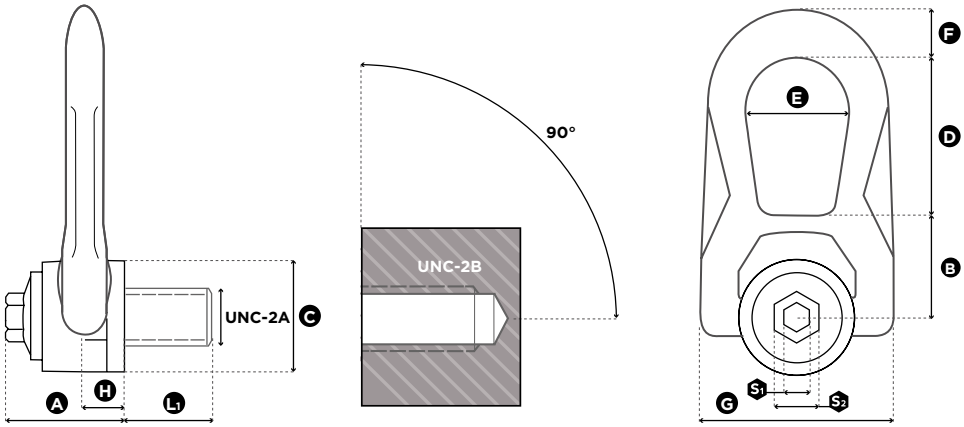

1 in = 25.4 mm

Reference	Diameter	SF 5:1 WLL (lbs)	SF 4:1 WLL (lbs)	Standard L_1 (mm)	Torque (ft-lb)	S_1 (mm)	S_2 (mm)	A (mm)	B (mm)	C (mm)	D (mm)	E (mm)	F (mm)	G (mm)	H (mm)	Weight (kg)
SS.DSR U 025	UNC 1/4"-20	**400**	**500**	13	3	8	16	32	30	30	39	28	13	53	9,5	0,3
SS.DSR U 516	UNC 5/16"-18	**600**	**650**	15	5	8	16	32	30	30	39	28	13	53	9,5	0,3
SS.DSR U 038	UNC 3/8"-16	**1,000**	**1,000**	17	8	8	16	32	30	30	39	28	13	53	9,5	0,3
SS.DSR U 050	UNC 1/2"-13	**1,800**	**1,850**	21	12	8	16	32	30	30	39	28	13	53	9,5	0,3
SS.DSR U 058	UNC 5/8"-11	**2,500**	**3,000**	27	40	8	20	44	40	45	53	38	17	76	13	0,9
SS.DSR U 075	UNC 3/4"-10	**3,600**	**3,800**	30	80	8	20	44	40	45	53	38	17	76	13	0,9
SS.DSR U 078	UNC 7/8"-9	**5,000**	**5,100**	33	90	14	24	62	55	58	83	56	25	115	19	2,5
SS.DSR U 100	UNC 1"-8	**6,000**	**6,000**	36	125	14	24	62	55	58	83	56	25	115	19	2,6

CODIPRO
ALIPA
www.codipro.net - info@codipro.net
25, Salzbaach – L-9559 WILTZ – Tel.: +352 26 81 54 1 - Fax: +352 81 05 17

SS.DSS

STAINLESS STEEL DOUBLE SWIVEL SHACKLE

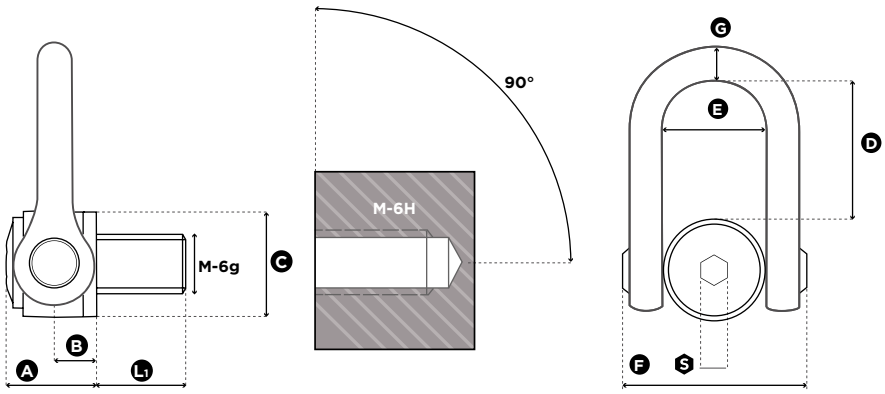

1 in = 25.4 mm

Reference	Diameter	SF 5:1 WLL (t)	SF 4:1 WLL (t)	Standard L_1 (mm)	Torque (Nm)	S (mm)	A (mm)	B (mm)	C (mm)	D (mm)	E (mm)	F (mm)	G (mm)	Weight (kg)
SS.DSS M 24	M 24 (x3)	**2,70**	**2,70**	36	160	19	61	31	70	98	73	149	30	5,2
SS.DSS M 30	M 30 (x3,5)	**3,50**	**3,50**	45	250	19	61	31	70	98	73	149	30	5,2
SS.DSS M 33	M 33 (x3,5)	**3,50**	**3,50**	50	250	19	61	31	70	98	73	149	30	5,2
SS.DSS M 36	M 36 (x4)	**5,00**	**5,00**	54	320	19	61	31	70	98	73	149	30	5,2
SS.DSS M 36x3	M 36 (x3)	**5,00**	**5,00**	54	320	19	61	31	70	98	73	149	30	5,2
SS.DSS M 39	M 39 (x4)	**5,00**	**5,00**	54	320	19	61	31	70	98	73	149	30	5,4
SS.DSS M 42	M 42 (x4,5)	**6,00**	**6,00**	63	400	19	61	31	70	98	73	149	30	5,4
SS.DSS M 42x3	M 42 (x3)	**6,00**	**6,00**	63	400	19	61	31	70	98	73	149	30	5,4
SS.DSS M 45	M 45 (x4,5)	**6,00**	**6,00**	63	400	19	61	31	70	98	73	149	30	5,7
SS.DSS M 48	M 48 (x5)	**6,40**	**6,40**	68	600	19	79	38	90	123	91	182	41	11,0
SS.DSS M 48x3	M 48 (x3)	**6,40**	**6,40**	68	600	19	79	38	90	123	91	182	41	11,0
SS.DSS M 48x4	M 48 (x4)	**6,40**	**6,40**	68	600	19	79	38	90	123	91	182	41	11,0
SS.DSS M 52	M 52 (x5)	**6,40**	**6,40**	68	600	19	79	38	90	123	91	182	41	11,2
SS.DSS M 56	M 56 (x5,5)	**8,00**	**8,00**	78	600	19	79	38	90	123	91	182	41	11,3
SS.DSS M 56x4	M 56 (x4)	**8,00**	**8,00**	78	600	19	79	38	90	123	91	182	41	11,4

CODIPRO
ALIPA
www.codipro.net - info@codipro.net
25, Salzbaach – L-9559 WILTZ – Tel.: +352 26 81 54 1 - Fax: +352 81 05 17

SS.DSS

STAINLESS STEEL DOUBLE SWIVEL SHACKLE

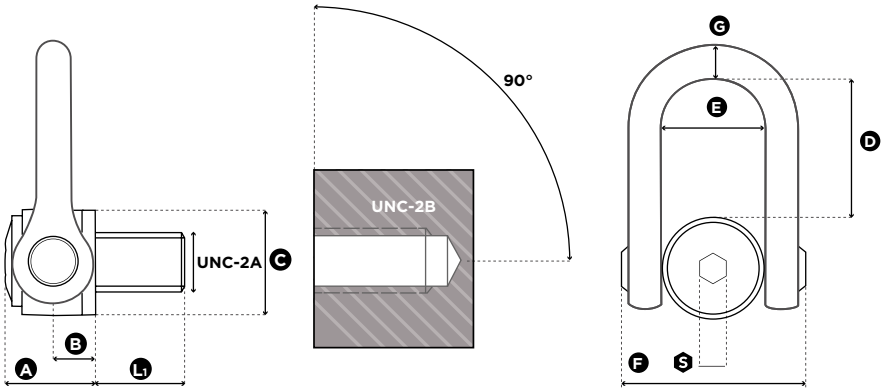

1 in = 25.4 mm

Reference	Diameter	SF 5:1 WLL (lbs)	SF 4:1 WLL (lbs)	Standard L_1 (mm)	Torque (ft-lb)	S (mm)	A (mm)	B (mm)	C (mm)	D (mm)	E (mm)	F (mm)	G (mm)	Weight (kg)
SS.DSS U 100	UNC 1"-8	**6,000**	**6,000**	36	125	3/4"	61	31	70	98	73	149	30	5,2
SS.DSS U 125	UNC 1" 1/4-7	**7,500**	**7,500**	45	200	3/4"	61	31	70	98	73	149	30	5,2
SS.DSS U 138	UNC 1" 3/8-6	**7,500**	**7,500**	54	240	3/4"	61	31	70	98	73	149	30	5,2
SS.DSS U 150	UNC 1" 1/2-6	**11,000**	**11,000**	54	240	3/4"	61	31	70	98	73	149	30	5,4
SS.DSS U 200	UNC 2" 4,5	**14,000**	**14,000**	76	450	3/4"	79	38	90	123	91	182	41	11,1

CODIPRO
ALIPA
www.codipro.net - info@codipro.net
25, Salzbaach – L-9559 WILTZ – Tel.: +352 26 81 54 1 - Fax: +352 81 05 17

SS.SEB

STAINLESS STEEL SWIVEL EYE BOLT

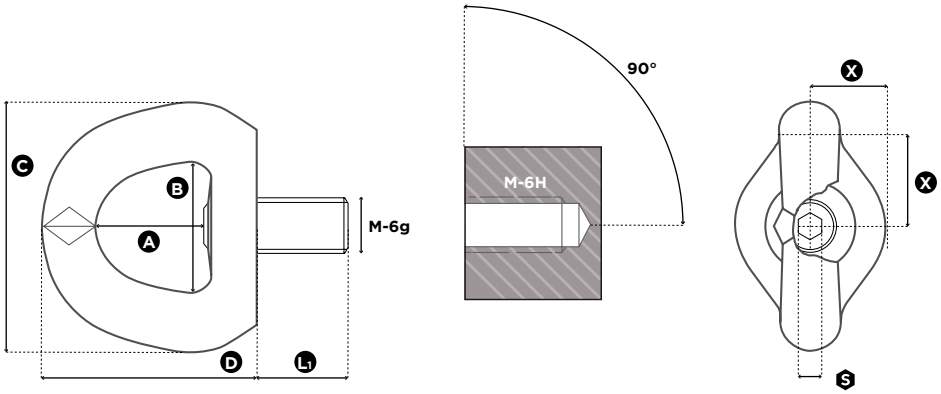

1 in = 25.4 mm

Reference	Diameter	SF 5:1 WLL (t)	SF 4:1 WLL (t)	Standard L_1 (mm)	Torque (Nm)	X	S (mm)	A (mm)	B (mm)	C (mm)	D (mm)	Weight (kg)
SS.SEB M 12	M 12 (x1,75)	**0,55**	**0,55**	21	15	35	8	38	45	90	80	0,80
SS.SEB M 16	M 16 (x2)	**1,20**	**1,20**	27	50	35	8	38	45	90	80	0,82
SS.SEB M 20	M 20 (x2,5)	**1,50**	**1,50**	30	100	35	8	38	45	90	80	0,84
SS.SEB M 24	M 24 (x3)	**2,50**	**2,50**	36	100	50	8	38	45	90	80	0,90

CODIPRO
ALIPA
www.codipro.net - info@codipro.net
25, Salzbaach – L-9559 WILTZ – Tel.: +352 26 81 54 1 - Fax: +352 81 05 17

SS.FE.DSR

STAINLESS STEEL FEMALE DOUBLE SWIVEL RING

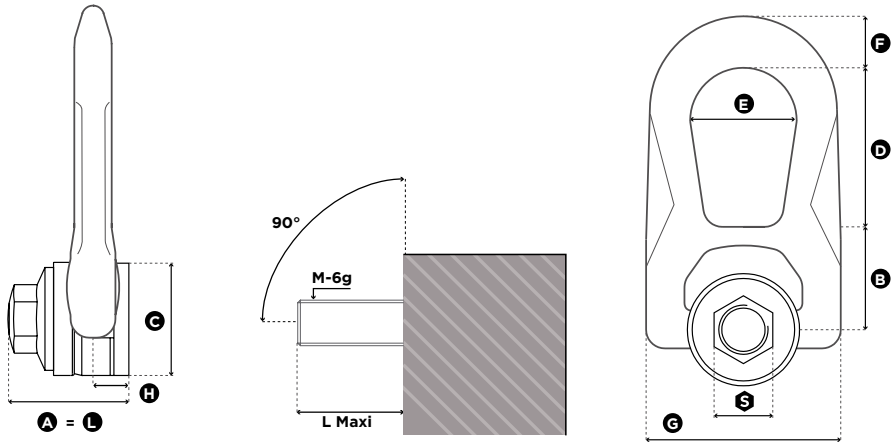

1 in = 25.4 mm

Reference	Diameter	SF 5:1 WLL (t)	SF 4:1 WLL (t)	L Maxi (mm)	Torque (Nm)	S (mm)	A (mm)	B (mm)	C (mm)	D (mm)	E (mm)	F (mm)	G (mm)	H (mm)	Weight (kg)
SS.FE.DSR M 8	M 8 (x1,25)	**0,30**	**0,30**	43	6	20	43	40	45	53	38	17	76	13	0,9
SS.FE.DSR M 10	M 10 (x1,50)	**0,50**	**0,50**	43	10	20	43	40	45	53	38	17	76	13	0,9
SS.FE.DSR M 12	M 12 (x1,75)	**0,80**	**0,80**	43	15	20	43	40	45	53	38	17	76	13	0,9
SS.FE.DSR M 14	M 14 (x2)	**1,00**	**1,00**	43	30	20	43	40	45	53	38	17	76	13	0,9
SS.FE.DSR M 16	M 16 (x2)	**1,40**	**1,50**	43	50	20	43	40	45	53	38	17	76	13	0,9
SS.FE.DSR M 18	M 18 (x2,5)	**1,40**	**1,50**	62	70	24	62	55	58	83	56	25	115	19	2,6
SS.FE.DSR M 20	M 20 (x2,5)	**1,40**	**1,60**	62	100	24	62	55	58	83	56	25	115	19	2,6
SS.FE.DSR M 22	M 22 (x2,5)	**2,20**	**2,20**	62	120	24	62	55	58	83	56	25	115	19	2,6

CODIPRO
ALIPA
www.codipro.net - info@codipro.net
25, Salzbaach – L-9559 WILTZ – Tel.: +352 26 81 54 1 - Fax: +352 81 05 17

SS.FE.DSR

STAINLESS STEEL FEMALE DOUBLE SWIVEL RING

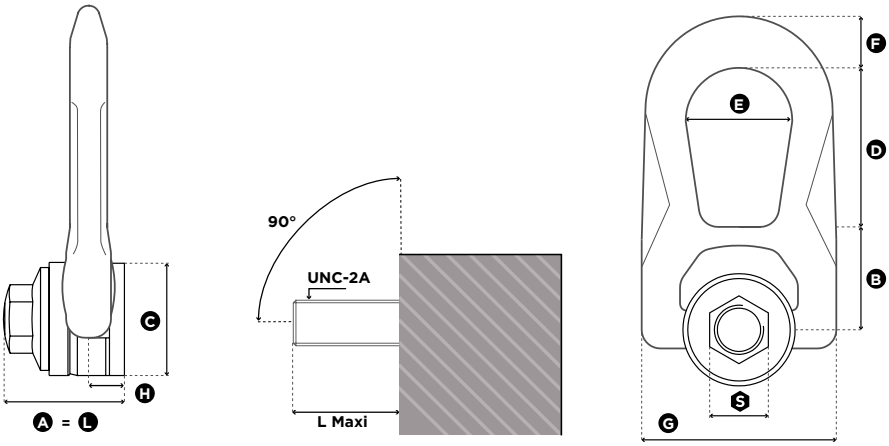

1 in = 25.4 mm

Reference	Diameter	SF 5:1 WLL (lbs)	SF 4:1 WLL (lbs)	L Maxi (mm)	Torque (ft-lb)	S (mm)	A (mm)	B (mm)	C (mm)	D (mm)	E (mm)	F (mm)	G (mm)	H (mm)	Weight (kg)
SS.FE.DSR U 516	UNC 5/16''-18	**600**	**650**	43	5	20	43	40	45	53	38	17	76	13	0,9
SS.FE.DSR U 038	UNC 3/8"-16	**1,000**	**1,000**	43	8	20	43	40	45	53	38	17	76	13	0,9
SS.FE.DSR U 050	UNC 1/2"-13	**1,800**	**1,800**	43	12	20	43	40	45	53	38	17	76	13	0,9
SS.FEDSR U 058	UNC 5/8"-11	**2,500**	**3,000**	43	40	20	43	40	45	53	38	17	76	13	0,9
SS.FE.DSR U 075	UNC 3/4"-10	**3,600**	**3,800**	62	80	24	62	55	58	83	56	25	115	19	2,6
SS.FE.DSR U 078	UNC 7/8"-9	**5,000**	**5,100**	62	90	24	62	55	58	83	56	25	115	19	2,6

CODIPRO
ALIPA
www.codipro.net - info@codipro.net
25, Salzbaach – L-9559 WILTZ – Tel.: +352 26 81 54 1 - Fax: +352 81 05 17

SS.FE.DSS

STAINLESS STEEL FEMALE DOUBLE SWIVEL SHACKLE

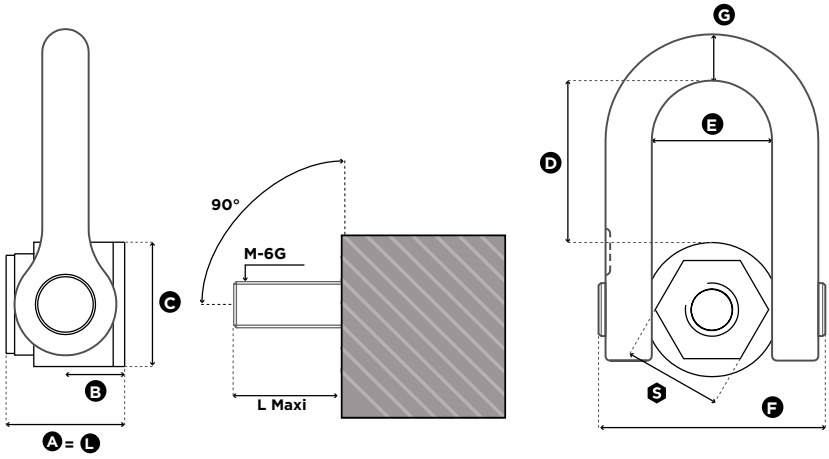

1 in = 25.4 mm

Reference	Diameter	SF 5:1 WLL (t)	SF 4:1 WLL (t)	L Maxi (mm)	Torque (Nm)	S (mm)	A (mm)	B (mm)	C (mm)	D (mm)	E (mm)	F (mm)	G (mm)	Weight (kg)
SS.FE.DSS M 24	M 24 (x3)	**2,70**	**2,70**	66	160	50	66	31	70	98	73	149	30	5,8
SS.FE.DSS M 30	M 30 (x3,5)	**3,50**	**3,50**	66	250	50	66	31	70	98	73	149	30	5,8
SS.FE.DSS M 33	M 33 (x3,5)	**3,50**	**3,50**	66	250	50	66	31	70	98	73	149	30	5,8
SS.FE.DSS M 36	M 36 (x4)	**5,00**	**5,00**	66	320	50	66	31	70	98	73	149	30	5,8

CODIPRO
www.codipro.net - info@codipro.net
25, Salzbaach – L-9559 WILTZ – Tel.: +352 26 81 54 1 - Fax: +352 81 05 17

SS.FE.DSS

STAINLESS STEEL FEMALE DOUBLE SWIVEL SHACKLE

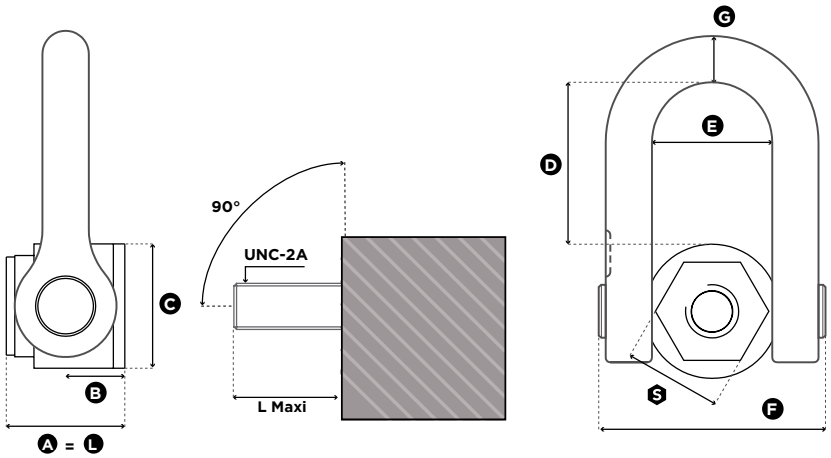

1 in = 25.4 mm

Reference	Diameter	SF 5:1 WLL (lbs)	SF 4:1 WLL (lbs)	L Maxi (mm)	Torque (Nm)	S (mm)	A (mm)	B (mm)	C (mm)	D (mm)	E (mm)	F (mm)	G (mm)	Weight (kg)
SS.FE.DSS U 100	UNC 1''-8	**6,000**	**6,000**	66	125	50	66	31	70	98	73	149	30	5,4
SS.FE.DSS U 125	UNC 1" 1/4-7	**7,500**	**7,500**	66	200	50	66	31	70	98	73	149	30	5,4
SS.FE.DSS U 138	UNC 1" 3/8-6	**7,500**	**7,500**	66	240	50	66	31	70	98	73	149	30	5,4
SS.FE.DSS U 150	UNC 1" 1/2-6	**11,000**	**11,000**	89	240	60	89	38	95	123	91	182	41	12,0

CODIPRO
ALIPA
www.codipro.net - info@codipro.net
25, Salzbaach – L-9559 WILTZ – Tel.: +352 26 81 54 1 - Fax: +352 81 05 17

SS.QL.DSR

STAINLESS STEEL QUICK LIFT DOUBLE SWIVEL RING

METRIC THREADS

QLR
Quick Lift Ring

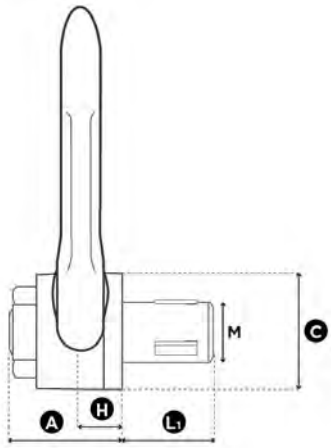

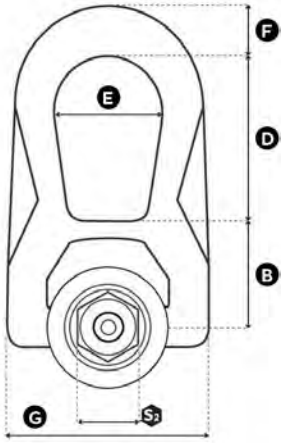

1 in = 25.4 mm

Reference	Diameter	SF 5:1 WLL (t)	Standard L_1 (mm)	Torque (Nm)	S_2 (mm)	A (mm)	B (mm)	C (mm)	D (mm)	E (mm)	F (mm)	G (mm)	H (mm)	Weight (kg)
SS.QL.DSR M 8	M 8 (x1,25)	**0,25**	17,5	20	18	31	30	30	38	27	14	53	9,5	0,3
SS.QL.DSR M 10	M 10 (x1,5)	**0,40**	19.5	30	18	31	30	30	38	27	14	53	9.5	0,3
SS.QL.DSR M 12	M 12 (x1,75)	**0,65**	23	60	27	40	40	45	53	38	17	76	13	0,9
SS.QL.DSR M 14	M 14 (x2)	**0,70**	23	80	27	40	40	45	53	38	17	76	13	0,9
SS.QL.DSR M 16	M 16 (x2)	**1,05**	27	100	27	40	40	45	53	38	17	76	13	0,9
SS.QL.DSR M 20	M 20 (x2,5)	**1,70**	30	160	40	55	55	60	83	55	25	115	19	2,6
SS.QL.DSR M 24	M 24 (x3)	**2,50**	36	180	40	55	55	60	83	55	25	115	19	2,6

CODIPRO
ALIPA
www.codipro.net - info@codipro.net
25, Salzbaach – L-9559 WILTZ – Tel.: +352 26 81 54 1 - Fax: +352 81 05 17

SS.QL.DSR

STAINLESS STEEL QUICK LIFT DOUBLE SWIVEL RING

UNC THREADS

QLR
Quick Lift Ring

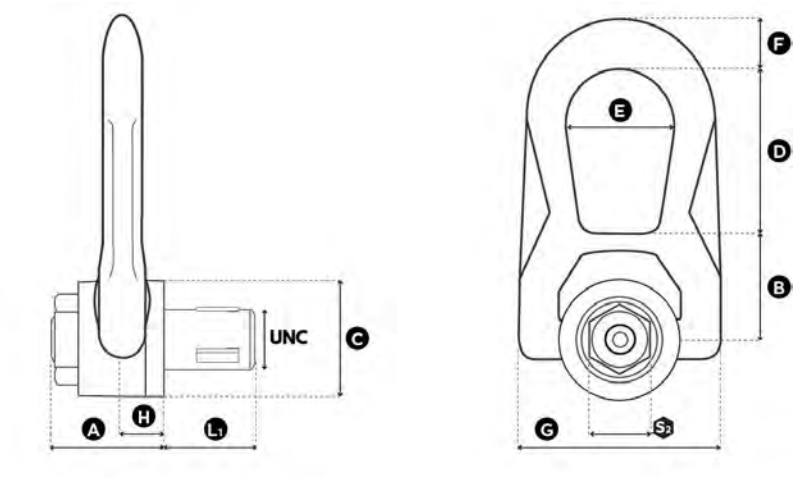

1 in = 25.4 mm

Reference	Diameter	SF 5:1 WLL (lbs)	Standard L1 (mm)	Torque (ft-lb)	S2 (mm)	A (mm)	B (mm)	C (mm)	D (mm)	E (mm)	F (mm)	G (mm)	H (mm)	Weight (kg)
SS.QL.DSR U 050	UNC 1/2"-13	**1,300***	23	*	27	40	40	45	53	38	17	76	13	0,9
SS.QL.DSR U 075	UNC 3/4"-10	**3,400***	30	*	40	55	55	60	83	55	25	115	19	2,6
SS.QL.DSR U 100	UNC 1"-8	**5,000***	36	*	40	55	55	60	83	55	25	115	19	2,6

* In certification process / En cours d'homologation / In Entwicklungsphase / En proceso de homologación

CODIPRO
ALIPA
www.codipro.net - info@codipro.net
25, Salzbaach – L-9559 WILTZ – Tel.: +352 26 81 54 1 - Fax: +352 81 05 17

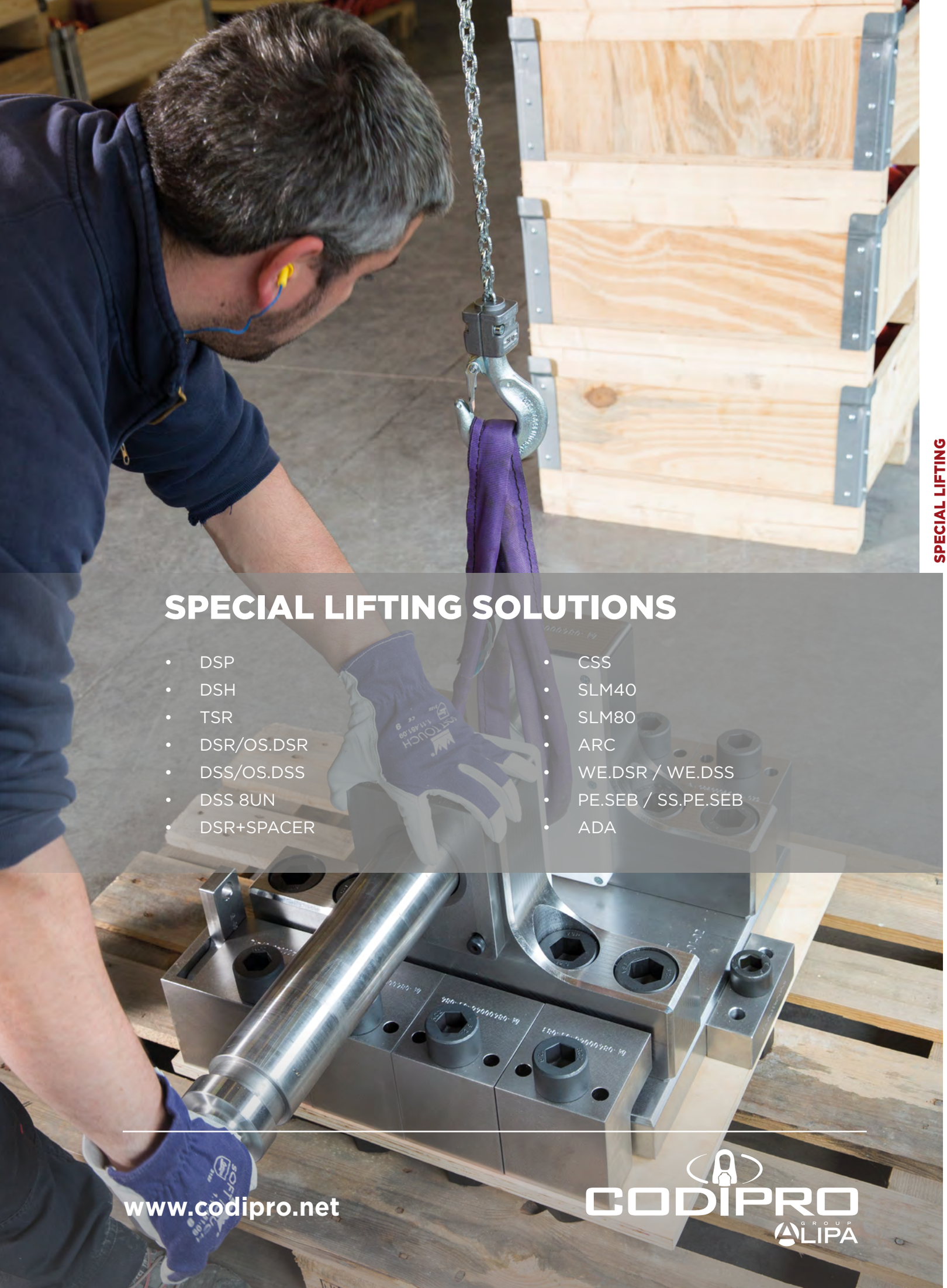

SPECIAL LIFTING SOLUTIONS

- DSP
- DSH
- TSR
- DSR/OS.DSR
- DSS/OS.DSS
- DSS 8UN
- DSR+SPACER
- CSS
- SLM40
- SLM80
- ARC
- WE.DSR / WE.DSS
- PE.SEB / SS.PE.SEB
- ADA

www.codipro.net

CODIPRO GROUP ALIPA

DSP

DOUBLE SWIVEL LIFTING POINT

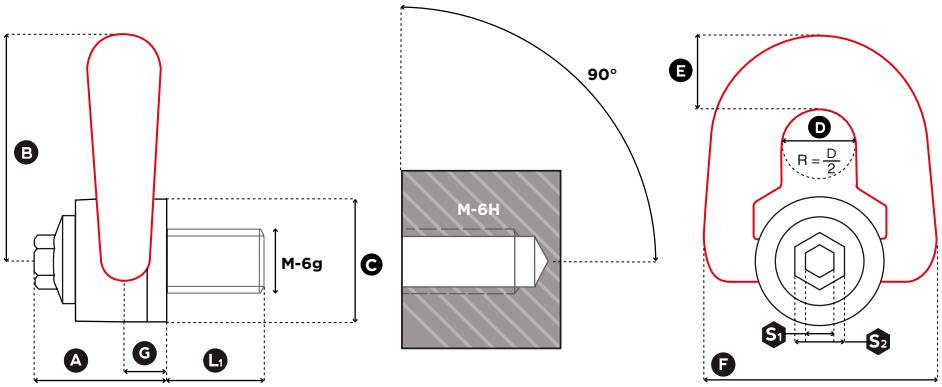

1 in = 25.4 mm

Reference	Diameter	SF 5:1 WLL (t)	Standard L_1 (mm)	Torque (Nm)	S_1 (mm)	S_2 (mm)	A (mm)	B (mm)	C (mm)	D (mm)	E (mm)	F (mm)	G (mm)	Weight (kg)
DSP M 8	M 8 (x1,25)	**0,40**	15	6	8	16	33	56	30	19	19	58	9,5	0,3
DSP M 10	M 10 (x1,50)	**0,70**	18	10	8	16	33	56	30	19	19	58	9,5	0,3
DSP M 12	M 12 (x1,75)	**1,05**	21	15	8	16	33	56	30	19	19	58	9,5	0,3
DSP M 14	M 14 (x2)	**1,40**	23	30	8	20	45	81	45	25	27	79	13	0,9
DSP M 16	M 16 (x2)	**2,00**	27	50	8	20	45	81	45	25	27	79	13	0,9
DSP M 18	M 18 (x2,5)	**2,30**	27	70	8	20	45	81	45	25	27	79	13	1,0
DSP M 20	M 20 (x2,5)	**2,50**	30	100	8	20	45	81	45	25	27	79	13	1,0

CODIPRO
www.codipro.net - info@codipro.net
25, Salzbaach – L-9559 WILTZ – Tel.: +352 26 81 54 1 - Fax: +352 81 05 17

DSP

DOUBLE SWIVEL LIFTING POINT

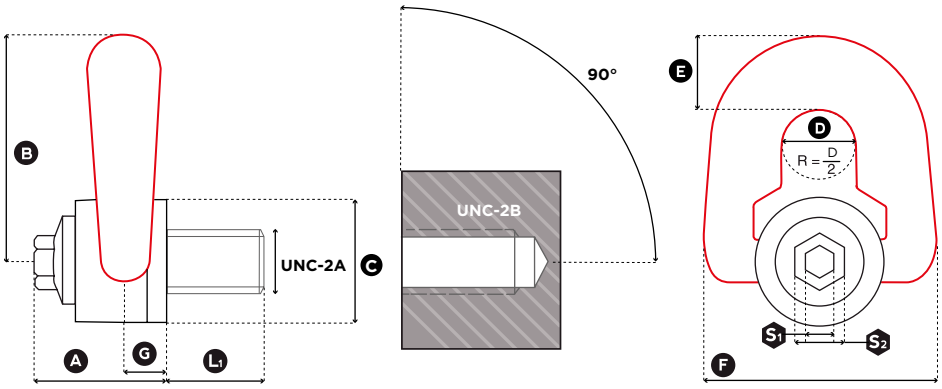

1 in = 25.4 mm

Reference	Diameter	SF 5:1 WLL (lbs)	Standard L1 (mm)	Torque (ft-lb)	S1 (mm)	S2 (mm)	A (mm)	B (mm)	C (mm)	D (mm)	E (mm)	F (mm)	G (mm)	Weight (kg)
DSP U 516	UNC 5/16"-18	**1,000**	15	7	8	16	33	56	30	19	19	58	9,5	0,3
DSP U 038	UNC 3/8"-16	**1,300**	18	8	8	16	33	56	30	19	19	58	9,5	0,3
DSP U 050	UNC 1/2"-13	**2,400**	21	12	8	16	33	56	30	19	19	58	9,5	0,3
DSP U 058	UNC 5/8"-11	**3,900**	27	40	8	16	45	81	45	25	27	79	13,0	1,0
DSP U 075	UNC 3/4"-10	**5,250**	30	80	8	16	45	81	45	25	27	79	13,0	1,0

CODIPRO
ALIPA
www.codipro.net - info@codipro.net
25, Salzbaach – L-9559 WILTZ – Tel.: +352 26 81 54 1 - Fax: +352 81 05 17

DSH

DOUBLE SWIVEL HOOK

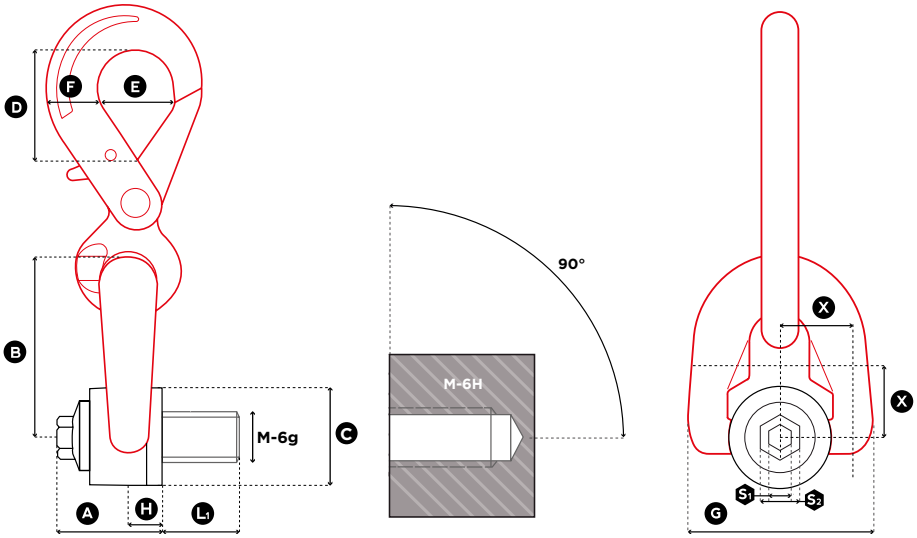

1 in = 25.4 mm

Reference	Diameter	SF 5:1 WLL (t)	Standard L1 (mm)	Torque (Nm)	X	X	S1 (mm)	S2 (mm)	A (mm)	B (mm)	C (mm)	D (mm)	E (mm)	F (mm)	G (mm)	H (mm)	Weight (kg)
DSH M 8	M 8 (x1,25)	**0,40**	15	6	18		8	16	33	56	30	44	32	23	58	9,5	0,8
DSH M 10	M 10 (x1,50)	**0,70**	18	10	18		8	16	33	56	30	44	32	23	58	9,5	0,8
DSH M 12	M 12 (x1,75)	**1,05**	21	15	18		8	16	33	56	30	44	32	23	58	9,5	0,8
DSH M 14	M 14 (x2)	**1,40**	23	30	24		8	20	45	81	45	75	50	36	79	13,0	1,9
DSH M 16	M 16 (x2)	**2,00**	27	50	24		8	20	45	81	45	75	50	36	79	13,0	2,0
DSH M 18	M 18 (x2,5)	**2,30**	27	70	24		8	20	45	81	45	75	50	36	79	13,0	2,0
DSH M 20	M 20 (x2,5)	**2,50**	30	100	24		8	20	45	81	45	75	50	36	79	13,0	2,0

CODIPRO
ALIPA
www.codipro.net - info@codipro.net
25, Salzbaach – L-9559 WILTZ – Tel.: +352 26 81 54 1 - Fax: +352 81 05 17

DSH

DOUBLE SWIVEL HOOK

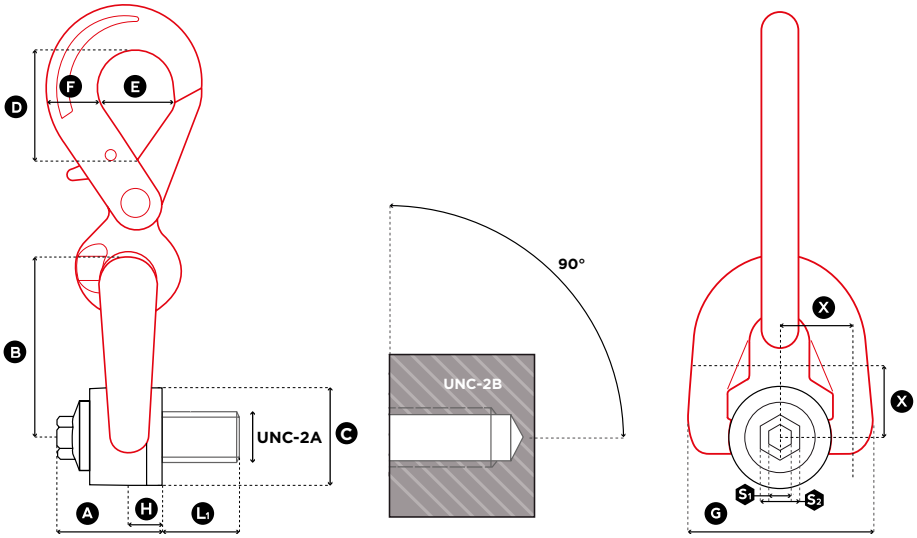

1 in = 25.4 mm

Reference	Diameter	SF 5:1 WLL (lbs)	Standard L_1 (mm)	Torque (ft-lb)	X	X	S_1 (mm)	S_2 (mm)	A (mm)	B (mm)	C (mm)	D (mm)	E (mm)	F (mm)	G (mm)	H (mm)	Weight (kg)
DSH U 516	UNC 5/16"-18	**1,000**	15	7	18		8	16	33	56	30	44	32	23	58	9,5	0,8
DSH U 038	UNC 3/8"-16	**1,300**	18	8	18		8	16	33	56	30	44	32	23	58	9,5	0,8
DSH U 050	UNC 1/2"-13	**2,400**	21	12	18		8	16	33	56	30	44	32	23	58	9,5	0,8
DSH U 058	UNC 5/8"-11	**3,900**	27	40	24		8	20	45	81	45	75	50	36	79	13,0	1,9
DSH U 075	UNC 3/4"-10	**5,250**	30	80	24		8	20	45	81	45	75	50	36	79	13,0	2,0

CODIPRO
ALIPA
www.codipro.net - info@codipro.net
25, Salzbaach – L-9559 WILTZ – Tel.: +352 26 81 54 1 - Fax: +352 81 05 17

TSR

TRIPLE SWIVEL RING

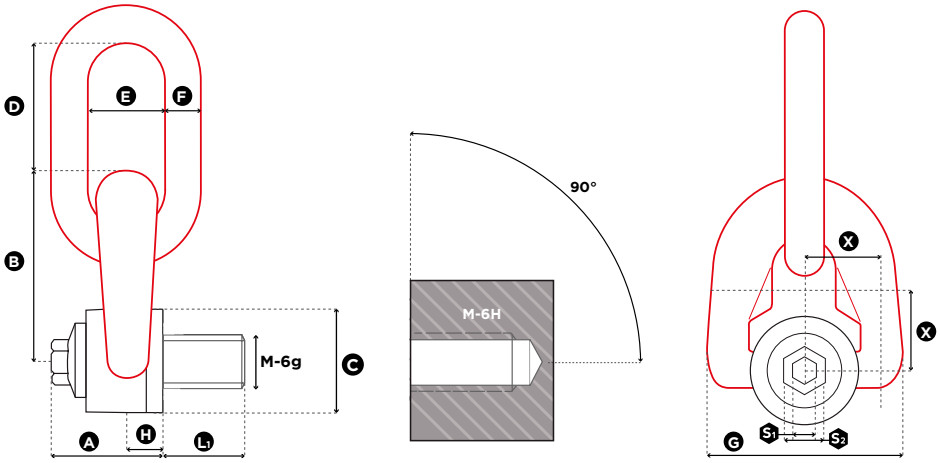

1 in = 25.4 mm

Reference	Diameter	SF 5:1 WLL (t)	Standard L1 (mm)	Torque (Nm)	X	S1 (mm)	S2 (mm)	A (mm)	B (mm)	C (mm)	D (mm)	E (mm)	F (mm)	G (mm)	H (mm)	Weight (kg)
TSR M 8	M 8 (x1,25)	**0,40**	15	6	18	8	16	33	56	30	41	25	10	58	9,5	0,4
TSR M 10	M 10 (x1,50)	**0,70**	18	10	18	8	16	33	56	30	41	25	10	58	9,5	0,4
TSR M 12	M 12 (x1,75)	**1,05**	21	15	18	8	16	33	56	30	41	25	10	58	9,5	0,4
TSR M 14	M 14 (x2)	**1,40**	23	30	24	8	20	45	81	45	56	37	14	79	13,0	1,1
TSR M 16	M 16 (x2)	**2,00**	27	50	24	8	20	45	81	45	56	37	14	79	13,0	1,2
TSR M 18	M 18 (x2,5)	**2,30**	27	70	24	8	20	45	81	45	56	37	14	79	13,0	1,2
TSR M 20	M 20 (x2,5)	**2,50**	30	100	24	8	20	45	81	45	56	37	14	79	13,0	1,2
TSR M 22*	M 22 (x2,5)	**3,00**	33	120	45	14	24	62	105	60	80	45	20	106	19,0	2,8
TSR M 24*	M 24 (x3)	**4,00**	36	160	45	14	24	62	105	60	80	45	20	106	19,0	2,9
TSR M 27*	M 27 (x3)	**5,00**	36	200	45	14	24	62	105	60	80	45	20	106	19,0	2,9
TSR M 30*	M 30 (x3,5)	**6,30**	45	250	45	14	24	62	105	60	80	45	20	106	19,0	3,0
TSR M 36*	M 36 (x4)	**10,00**	54	320	54	19	30	81	140	80	111	71	30	148	26,5	7,6
TSR M 42*	M 42 (x4,5)	**12,50**	63	400	58	19	30	84	146	80	111	71	30	148	26,5	7,8

Reference	Diameter	SF 4:1 WLL (t)	Standard L1 (mm)	Torque (Nm)	X	S1 (mm)	S2 (mm)	A (mm)	B (mm)	C (mm)	D (mm)	E (mm)	F (mm)	G (mm)	H (mm)	Weight (kg)
TSR M 48	M 48 (x5)	**20,00**	68	600	69	19	30	100	178	110	135	90	42	180	33,0	17,5
TSR M 56	M 56 (x5,5)	**22,00**	78	600	73	19	30	104	184	110	135	90	42	190	33,0	18,0

* On request / Sur demande / Auf Anfrage / Bajo solicitud

CODIPRO
ALIPA
www.codipro.net - info@codipro.net
25, Salzbaach – L-9559 WILTZ – Tel.: +352 26 81 54 1 - Fax: +352 81 05 17

TSR

TRIPLE SWIVEL RING

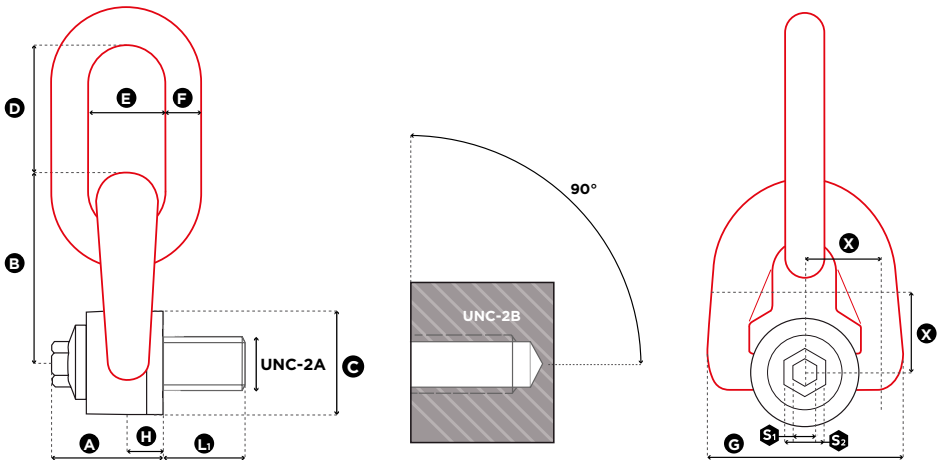

1 in = 25.4 mm

Reference	Diameter	SF 5:1 WLL (lbs)	Standard L1 (mm)	Torque (ft-lb)	X	S1 (mm)	S2 (mm)	A (mm)	B (mm)	C (mm)	D (mm)	E (mm)	F (mm)	G (mm)	H (mm)	Weight (kg)
TSR U 516	UNC 5/16"-18	**1,000**	15	7	18	8	16	33	56	30	41	25	10	58	9,5	0,4
TSR U 038	UNC 3/8"-16	**1,300**	18	8	18	8	16	33	56	30	41	25	10	58	9,5	0,4
TSR U 050	UNC 1/2"-13	**2,400**	21	12	18	8	16	33	56	30	41	25	10	58	9,5	0,4
TSR U 058	UNC 5/8"-11	**3,900**	27	40	24	8	20	45	81	45	56	37	14	79	13,0	1,1
TSR U 075	UNC 3/4"-10	**5,250**	30	80	24	8	20	45	81	45	56	37	14	79	13,0	1,2
TSR U 078*	UNC 7/8"-9	**6,600**	33	90	41	14	24	62	84	60	80	45	20	106	19,0	2,7
TSR U 100*	UNC 1"-8	**10,000**	36	125	41	14	24	62	84	60	80	45	20	106	19,0	2,8
TSR U 125*	UNC 1" 1/4-7	**14,000**	46	200	41	14	24	84	146	80	111	71	30	106	26,5	7,1
TSR U 150*	UNC 1" 1/2-6	**20,000**	61	240	54	19	30	84	146	80	111	71	30	148	26,5	7,7

1 in = 25.4 mm

Reference	Diameter	SF 4:1 WLL (lbs)	Standard L1 (mm)	Torque (Nm)	X	S1 (mm)	S2 (mm)	A (mm)	B (mm)	C (mm)	D (mm)	E (mm)	F (mm)	G (mm)	H (mm)	Weight (kg)
TSR U 200	UNC 2" 4,5	**50,000**	76	450	66	19	30	104	184	110	135	90	42	190	33,0	17,7

* On request / Sur demande / Auf Anfrage / Bajo solicitud

CODIPRO
ALIPA
www.codipro.net - info@codipro.net
25, Salzbaach – L-9559 WILTZ – Tel.: +352 26 81 54 1 - Fax: +352 81 05 17

DSR

DOUBLE SWIVEL RING

DNVGL-ST-0378 : TYPE APPROVED RANGE - OFFSHORE APPLICATIONS - INTERNAL USE

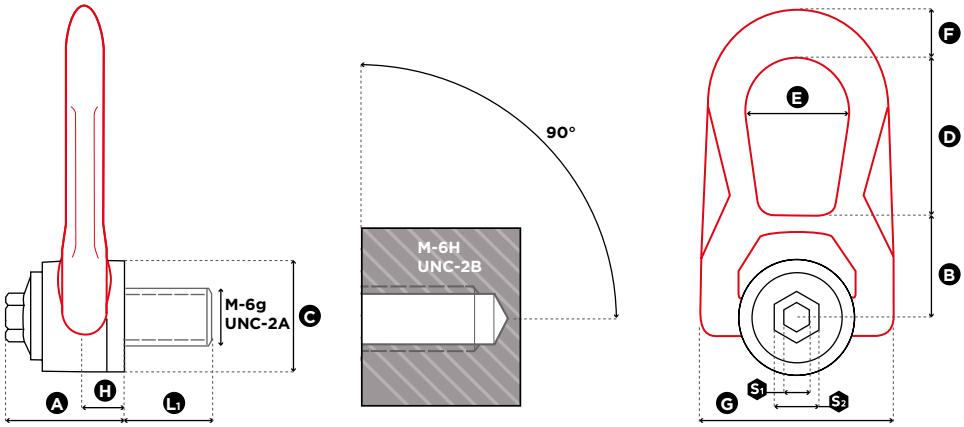

TYPE APPROVED PRODUCT
DNV·GL
DNVGL.COM/AF

DNVGL-ST-0378 TYPE APPROVAL CERTIFICATE N° TAS00001ZG

1 in = 25.4 mm

Reference	Diameter	SF 5:1 WLL (t)	SF 4:1 WLL (t)	Standard L_1 (mm)	Torque (Nm)	S_1 (mm)	S_2 (mm)	A (mm)	B (mm)	C (mm)	D (mm)	E (mm)	F (mm)	G (mm)	H (mm)	Weight (kg)
DSR M 10 UP	M 10 (x1.50)	**0,70**	**0,90**	18	10	8	16	33	30	30	38	27	14	53	9,5	0,3
DSR M 12 UP	M 12 (x1.75)	**1,05**	**1,30**	21	15	8	16	33	30	30	38	27	14	53	9,5	0,3
DSR M 16 UP	M 16 (x2)	**2,00**	**2,30**	27	50	8	20	45	40	45	53	38	17	76	13	0,9
DSR M 20 3t2 UP	M 20 (x2.5)	**2,90**	**3,20**	25	100	14	24	62	55	60	83	55	25	115	19	2,6
DSR M 24 UP	M 24 (x3)	**4,40**	**5,50**	36	160	14	24	62	55	60	83	55	25	115	19	2,6
DSR M 30 6t3 UP	M 30 (x3.5)	**6,00**	**6,30**	45	250	14	24	62	55	60	83	55	25	115	19	2,7

DNVGL-ST-0378 TYPE APPROVAL CERTIFICATE N° TAS00001ZG

Reference	Diameter	SF 5:1 WLL (lbs)	SF 4:1 WLL (lbs)	Standard L_1 (mm)	Torque (Nm)	S_1 (mm)	S_2 (mm)	A (mm)	B (mm)	C (mm)	D (mm)	E (mm)	F (mm)	G (mm)	H (mm)	Weight (kg)
DSR U 038 UP	UNC 3/8"-16	**1,300**	**1,600**	17	8	8	16	33	30	30	38	27	14	53	9,5	0,3
DSR U 050 UP	UNC 1/2"-13	**2,400**	**2,800**	21	12	8	16	33	30	30	38	27	14	53	9,5	0,3
DSR U 058 UP	UNC 5/8"-11	**3,900**	**4,900**	27	40	8	20	45	40	45	53	38	17	76	13	0,9
DSR U 075 UP	UNC 3/4"-10	**5,250**	**5,250**	30	80	8	20	45	40	45	53	38	17	76	13	0,9
DSR U 100 UP	UNC 1"-8	**11,200**	**12,500**	36	125	14	24	62	55	60	83	55	25	115	19	2,6
DSR U 125 UP	UNC 1" 1/4-7	**13,500**	**13,500**	45	200	14	24	62	55	60	83	55	25	115	19	2,7

CODIPRO
ALIPA
www.codipro.net - info@codipro.net
25, Salzbaach – L-9559 WILTZ – Tel.: +352 26 81 54 1 - Fax: +352 81 05 17

OS.DSR

DOUBLE SWIVEL RING

DNVGL-ST-0378 : TYPE APPROVED RANGE - OFFSHORE APPLICATIONS - EXTERNAL USE

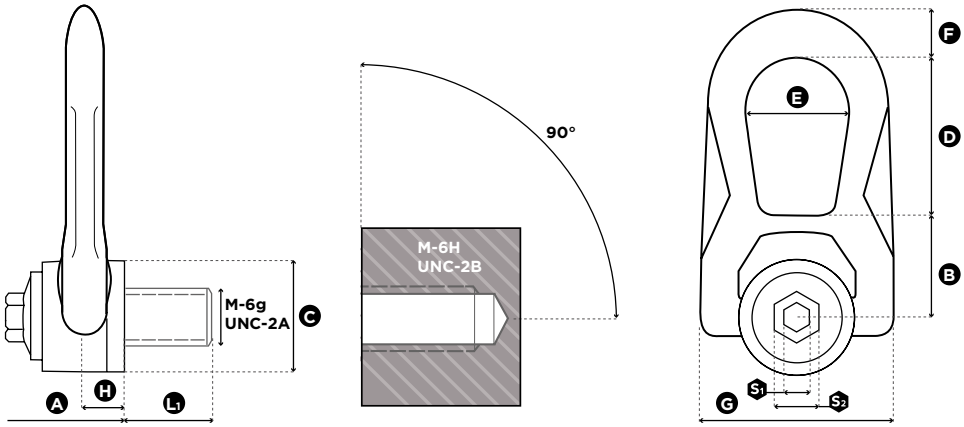

TYPE APPROVED PRODUCT
DNV·GL
DNVGL.COM/AF

DNVGL-ST-0378 TYPE APPROVAL CERTIFICATE N° TAS00001ZG

1 in = 25.4 mm

Reference	Diameter	SF 5:1 WLL (t)	SF 4:1 WLL (t)	Standard L_1 (mm)	Torque (Nm)	S_1 (mm)	S_2 (mm)	A (mm)	B (mm)	C (mm)	D (mm)	E (mm)	F (mm)	G (mm)	H (mm)	Weight (kg)
OS.DSR M 10 UP	M 10 (x1.50)	0,70	0,90	18	10	8	16	33	30	30	38	27	14	53	9,5	0,3
OS.DSR M 12 UP	M 12 (x1.75)	1,05	1,30	21	15	8	16	33	30	30	38	27	14	53	9,5	0,3
OS.DSR M 16 UP	M 16 (x2)	2,00	2,30	27	50	8	20	45	40	45	53	38	17	76	13	0,9
OS.DSR M 20 3t2 UP	M 20 (x2.5)	2,90	3,20	25	100	14	24	62	55	60	83	55	25	115	19	2,6
OS.DSR M 24 UP	M 24 (x3)	4,40	5,50	36	160	14	24	62	55	60	83	55	25	115	19	2,6
OS.DSR M 30 6t3 UP	M 30 (x3.5)	6,00	6,30	45	250	14	24	62	55	60	83	55	25	115	19	2,7

DNVGL-ST-0378 TYPE APPROVAL CERTIFICATE N° TAS00001ZG

Reference	Diameter	SF 5:1 WLL (lbs)	SF 4:1 WLL (lbs)	Standard L_1 (mm)	Torque (Nm)	S_1 (mm)	S_2 (mm)	A (mm)	B (mm)	C (mm)	D (mm)	E (mm)	F (mm)	G (mm)	H (mm)	Weight (kg)
OS.DSR U 038 UP	UNC 3/8"-16	1,300	1,600	17	8	8	16	33	30	30	38	27	14	53	9,5	0,3
OS.DSR U 050 UP	UNC 1/2"-13	2,400	2,800	21	12	8	16	33	30	30	38	27	14	53	9,5	0,3
OS.DSR U 058 UP	UNC 5/8"-11	3,900	4,900	27	40	8	20	45	40	45	53	38	17	76	13	0,9
OS.DSR U 075 UP	UNC 3/4"-10	5,250	5,250	30	80	8	20	45	40	45	53	38	17	76	13	0,9
OS.DSR U 100 UP	UNC 1"-8	11,200	12,500	36	125	14	24	62	55	60	83	55	25	115	19	2,6
OS.DSR U 125 UP	UNC 1" 1/4-7	13,500	13,500	45	200	14	24	62	55	60	83	55	25	115	19	2,7

CODIPRO
ALIPA
www.codipro.net - info@codipro.net
25, Salzbaach – L-9559 WILTZ – Tel.: +352 26 81 54 1 - Fax: +352 81 05 17

DSS

DOUBLE SWIVEL SHACKLE

DNVGL-ST-0378 : TYPE APPROVED RANGE - OFFSHORE APPLICATIONS - INTERNAL USE

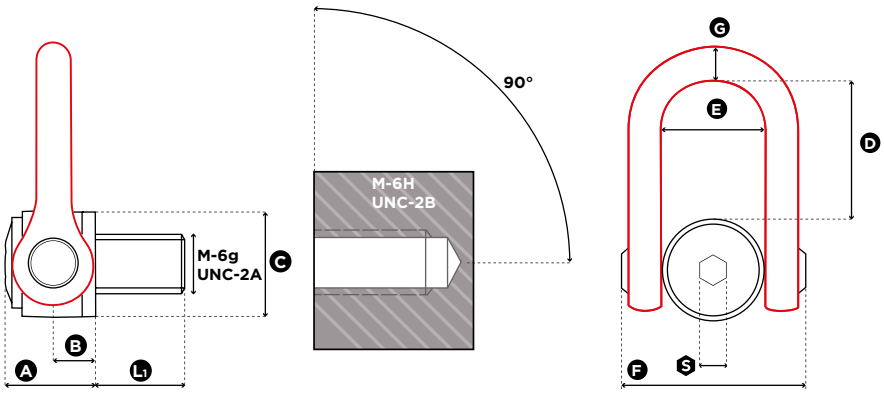

TYPE APPROVED PRODUCT
DNV·GL
DNVGL.COM/AF

DNVGL-ST-0378 TYPE APPROVAL CERTIFICATE N° TAS00001ZG

1 in = 25.4 mm

Reference	Diameter	SF 5:1 WLL (t)	SF 4:1 WLL (t)	Standard L_1 (mm)	Torque (Nm)	S (mm)	A (mm)	B (mm)	C (mm)	D (mm)	E (mm)	F (mm)	G (mm)	Weight (kg)
DSS M 24 UP	M 24 (x3)	**4,50**	**5,50**	36	160	19	61	31	70	98	73	149	33	5,4
DSS M 30 UP	M 30 (x3.5)	**7,70**	**8,50**	45	250	19	61	31	70	98	73	149	33	5,5
DSS M 36 UP	M 36 (x4)	**11,00**	**12,00**	54	320	19	61	31	70	98	73	149	33	5,5
DSS M 42 UP	M 42 (x4,5)	**13,00**	**15,00**	63	400	19	61	31	70	98	73	149	33	5,8

DNVGL-ST-0378 TYPE APPROVAL CERTIFICATE N° TAS00001ZG

Reference	Diameter	SF 5:1 WLL (lbs)	SF 4:1 WLL (lbs)	Standard L_1 (mm)	Torque (Nm)	S (mm)	A (mm)	B (mm)	C (mm)	D (mm)	E (mm)	F (mm)	G (mm)	Weight (kg)
DSS U 100 UP	UNC 1"-8	**10,000**	**13,000**	36	125	19	61	31	70	98	73	149	33	5,4
DSS U 125 UP	UNC 1" 1/4-7	**15,000**	**19,000**	45	200	19	61	31	70	98	73	149	33	5,4
DSS U 150 UP	UNC 1" 1/2-6	**22,000**	**27,000**	54	240	19	61	31	70	98	73	149	33	5,4
DSS U 175 UP	UNC 1" 3/4-5	**27,000**	**33,000**	63	300	19	61	31	70	98	73	149	33	5,9

CODIPRO ALIPA
www.codipro.net - info@codipro.net
25, Salzbaach – L-9559 WILTZ – Tel.: +352 26 81 54 1 - Fax: +352 81 05 17

OS.DSS

DOUBLE SWIVEL SHACKLE

DNVGL-ST-0378 : TYPE APPROVED RANGE - OFFSHORE APPLICATIONS - EXTERNAL USE

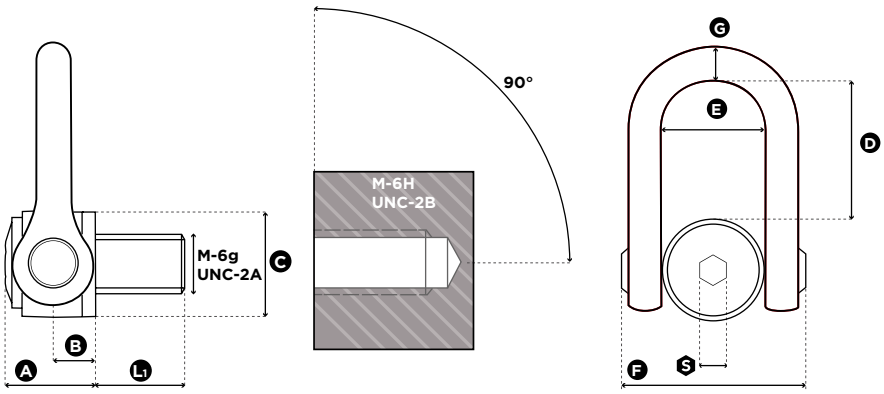

TYPE APPROVED PRODUCT
DNV·GL
DNVGL.COM/AF

DNVGL-ST-0378 TYPE APPROVAL CERTIFICATE N° TAS00001ZG

1 in = 25.4 mm

Reference	Diameter	SF 5:1 WLL (t)	SF 4:1 WLL (t)	Standard L_1 (mm)	Torque (Nm)	S (mm)	A (mm)	B (mm)	C (mm)	D (mm)	E (mm)	F (mm)	G (mm)	Weight (kg)
OS.DSS M 24 UP	M 24 (x3)	**4,50**	**5,50**	36	160	19	61	31	70	98	73	149	33	5,4
OS.DSS M 30 UP	M 30 (x3.5)	**7,70**	**8,50**	45	250	19	61	31	70	98	73	149	33	5,5
OS.DSS M 36 UP	M 36 (x4)	**11,00**	**12,00**	54	320	19	61	31	70	98	73	149	33	5,5
OS.DSS M 42 UP	M 42 (x4,5)	**13,00**	**15,00**	63	400	19	61	31	70	98	73	149	33	5,8

DNVGL-ST-0378 TYPE APPROVAL CERTIFICATE N° TAS00001ZG

Reference	Diameter	SF 5:1 WLL (lbs)	SF 4:1 WLL (lbs)	Standard L_1 (mm)	Torque (Nm)	S (mm)	A (mm)	B (mm)	C (mm)	D (mm)	E (mm)	F (mm)	G (mm)	Weight (kg)
OS.DSS U 100 UP	UNC 1"-8	**10,000**	**13,000**	36	125	19	61	31	70	98	73	149	33	5,4
OS.DSS U 125 UP	UNC 1" 1/4-7	**15,000**	**19,000**	45	200	19	61	31	70	98	73	149	33	5,4
OS.DSS U 150 UP	UNC 1" 1/2-6	**22,000**	**27,000**	54	240	19	61	31	70	98	73	149	33	5,4
OS.DSS U 175 UP	UNC 1" 3/4-5	**27,000**	**33,000**	63	300	19	61	31	70	98	73	149	33	5,9

CODIPRO ALIPA
www.codipro.net - info@codipro.net
25, Salzbaach – L-9559 WILTZ – Tel.: +352 26 81 54 1 - Fax: +352 81 05 17

DSS 8UN

DOUBLE SWIVEL SHACKLE

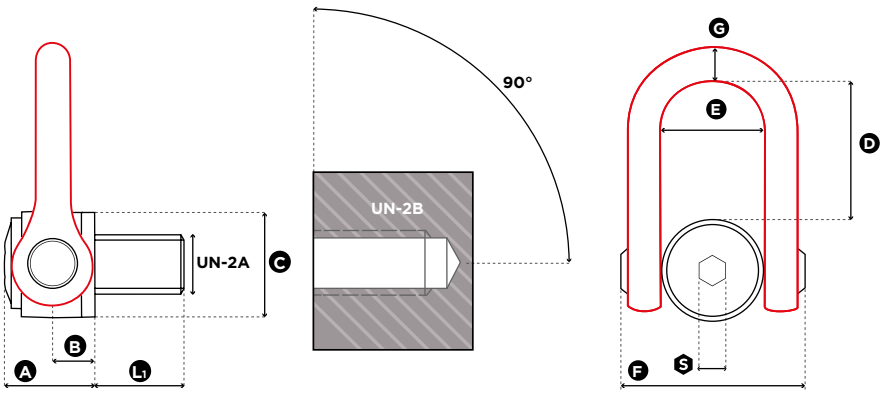

1 in = 25.4 mm

Reference	Diameter	SF 5:1 WLL (lbs)	SF 4:1 WLL (lbs)	Standard L_1 (mm)	Torque (ft-lb)	S (mm)	A (mm)	B (mm)	C (mm)	D (mm)	E (mm)	F (mm)	G (mm)	Weight (kg)
DSS U 118 8UN	UN 1" 1/8-8	**11,000**	**11,000**	45	150	19	61	31	70	98	73	149	33	5,4
DSS U 125 8UN	UN 1" 1/4-8	**14,000**	**14,000**	45	200	19	61	31	70	98	73	149	33	5,4
DSS U 138 8UN	UN 1" 3/8-8	**20,000**	**20,000**	54	240	19	61	31	70	98	73	149	33	5,4
DSS U 150 8UN	UN 1" 1/2-8	**20,000**	**20,000**	54	240	19	61	31	70	98	73	149	33	5,4
DSS U 175 8UN	UN 1" 3/4-8	**27,000**	**27,000**	63	300	19	61	31	70	98	73	149	33	5,9
DSS U 200 8UN	UN 2"-8	**50,000**	**50,000**	76	450	19	79	38	90	123	91	182	45	11,1

CODIPRO
ALIPA
www.codipro.net - info@codipro.net
25, Salzbaach – L-9559 WILTZ – Tel.: +352 26 81 54 1 - Fax: +352 81 05 17

DSR + SPACER

METRIC THREADS

DOUBLE SWIVEL RING WITH SPACER

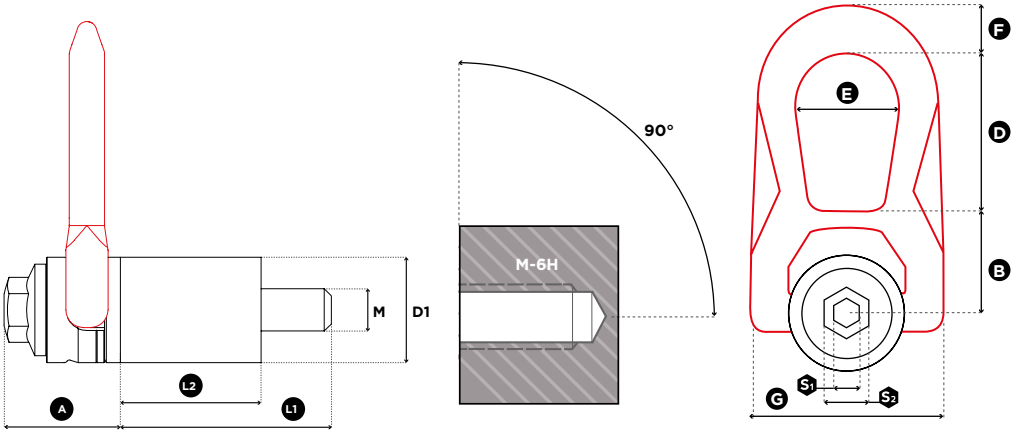

Reference	Diameter M1	SF 4:1 WLL (t)	Standard L_2 (mm)	Standard L_1 (mm)	Torque (Nm)	S_1 (mm)	S_2 (mm)	A (mm)	B (mm)	D_1 (mm)	D (mm)	E (mm)	F (mm)	G (mm)	H (mm)	Weight (kg)
DSR M8 SPA3050	M 8 (x1.25)	**0,18**	50	65	6	8	16	33	30	30	38	27	14	53	9,5	0,6
DSR M10 SPA3050	M 10 (x1.50)	**0,26**	50	68	10	8	16	33	30	30	38	27	14	53	9,5	0,6
DSR M12 SPA3050	M 12 (x1.75)	**0,36**	50	71	15	8	16	33	30	30	38	27	14	53	9,5	0,6
DSR M16 SPA4550	M 16 (x2)	**0,86**	50	77	50	8	20	45	40	45	53	38	17	76	13	1,5
DSR M16 SPA45100	M 16 (x2)	**0,55**	100	127	50	8	20	45	40	45	53	38	17	76	13	2,0
DSR M20 SPA4550	M 20 (x2.5)	**1,26**	50	80	100	8	20	45	40	45	53	38	17	76	13	1,5
DSR M20 SPA45100	M 20 (x2.5)	**0,78**	100	130	100	8	20	45	40	45	53	38	17	76	13	2,0
DSR M24 SPA6050	M 24 (x3)	**2,39**	50	86	160	14	24	62	55	60	83	55	25	115	19	3,5
DSR M24 SPA60100	M 24 (x3)	**1,46**	100	136	160	14	24	62	55	60	83	55	25	115	19	4,2
DSR M30 SPA6050	M 30 (x3.5)	**3,58**	50	95	250	14	24	62	55	60	83	55	25	115	19	3,5
DSR M30 SPA60100	M 30 (x3.5)	**2,05**	100	145	250	14	24	62	55	60	83	55	25	115	19	4,2

Other variants available upon request / Autres variantes sur demande / Weitere Varianten auf Anfrage / Otras variantes bajo solicitud

CODIPRO ALIPA
www.codipro.net - info@codipro.net
25, Salzbaach – L-9559 WILTZ – Tel.: +352 26 81 54 1 - Fax: +352 81 05 17

CSS

CENTRAL SAFETY SHACKLE

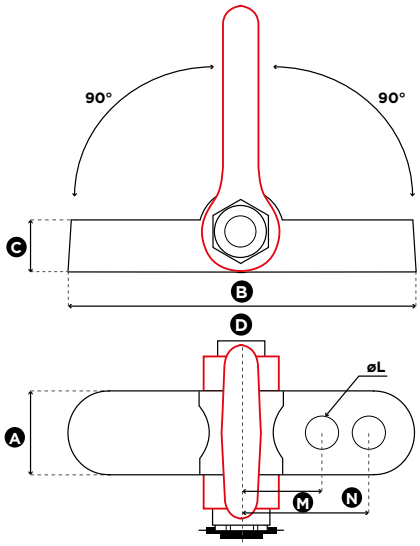

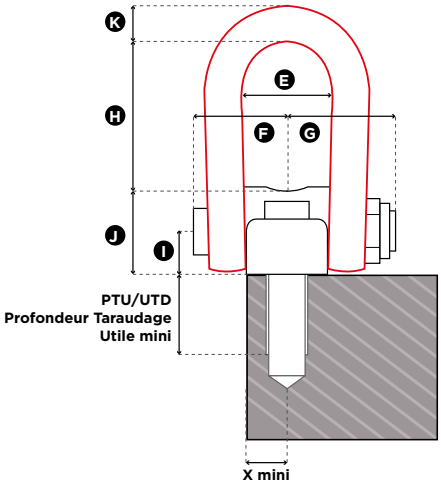

Lifting	0 - 90°
Levage	0 - 90°
Hebung	0 - 90°
Elevación	0 - 90°

1 in = 25.4 mm

Reference	SF 4:1 WLL (t)	X mini	A (mm)	B (mm)	C (mm)	D (mm)	E (mm)	F (mm)	G (mm)	H (mm)	I (mm)	J (mm)	K (mm)	Weight (kg)
CSS 20	20	40	80	220	50	62	90	88	98	132	38	76	41,0	12,7
CSS 32	32	40	80	330	50	62	90	88	98	132	38	76	41,0	16,7
CSS 55	55	53	105	540	85	191	184	160	170	267	85	175	79,5	90,0

Drilling and fastening by screws DIN 912-12.9 / Perçage et fixation par vis DIN 912-12.9 / Bohrung und Montage mit Schrauben DIN 912-12.9 / Taladro y fijación por DIN 912-12.9

1 in = 25.4 mm

Reference	Drilling/Perçage/ Bohrung/Taladro			PTU/ UTD	Screw/Vis/Schraube/Tornillo					
	ø L	M (mm)	N (mm)	Useful Minimum Thread Depth (mm)	Quantity Quantité Menge Cantidad	Model Modèle Modell Modelo	Length Longueur Länge Longitud (mm)	Head / Tête / Schraubenkopf / Encima: Diam (mm)	Head / Tête / Schraubenkopf / Encima: Height / Hauteur / Höhe / Altura (mm)	Torque (Nm)
CSS 20	38	70	/	54	2	M36	100	54	36	600
CSS 32	38	70	130	54	4	M36	100	54	36	600
CSS 55	50	133	210	85	4	M48	160	72	48	600

CODIPRO ALIPA
www.codipro.net - info@codipro.net
25, Salzbaach – L-9559 WILTZ – Tel.: +352 26 81 54 1 - Fax: +352 81 05 17

SLM

LIFTING SYSTEM FOR MOULD UP TO 40 TONS

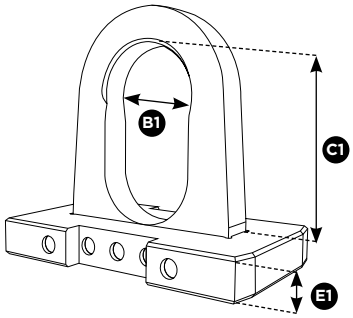

4:1 · ANTI-CRACK 100% · Fatigue TEST · INDIVIDUAL · MADE TO MEASURE · UNIT PRODUCTION · ISO 9001 · ISO 14001 · ISO 27001 · MADE IN LUXEMBOURG

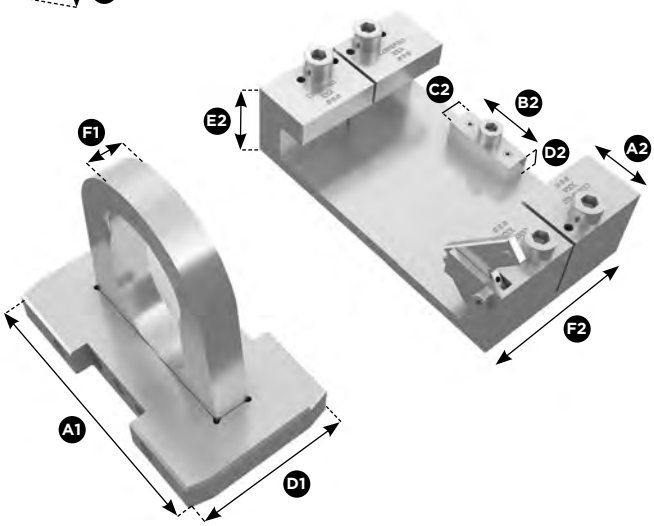

LOCK CONTROL INCLUDED

A1 (mm)	B1 (mm)	C1 (mm)	D1 (mm)	E1 (mm)	F1 (mm)
470	170	300	270	65	60

A2 (mm)	B2 (mm)	C2 (mm)	D2 (mm)	E2 (mm)	F2 (mm)
120	150	50	50	130	342

Kit 1

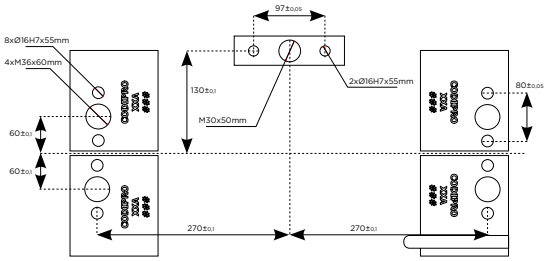

Kit 2

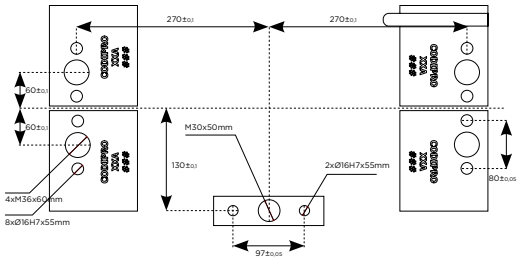

Kit 3

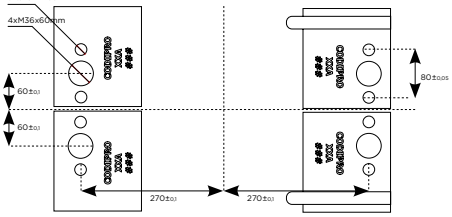

10.2021

CODIPRO
www.codipro.net - info@codipro.net
25, Salzbaach – L-9559 WILTZ – Tel.: +352 26 81 54 1 - Fax: +352 81 05 17

SLM

LIFTING SYSTEM FOR MOULD UP TO 80 TONS

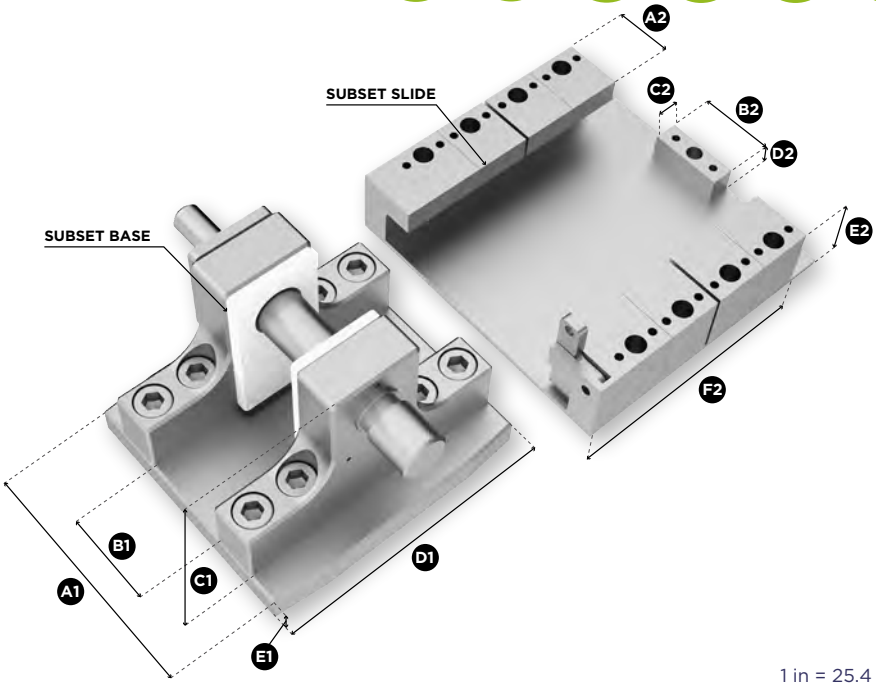

1 in = 25.4 mm

A1 (mm)	B1 (mm)	C1 (mm)	D1 (mm)	E1 (mm)
470	170	315	500	60

A2 (mm)	B2 (mm)	C2 (mm)	D2 (mm)	E2 (mm)	F2 (mm)
120	150	50	50	130	517,5

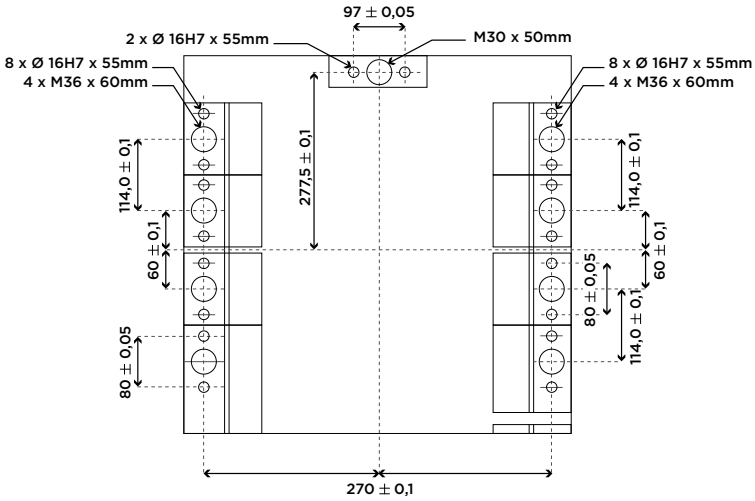

10.2021

CODIPRO
ALIPA
www.codipro.net - info@codipro.net
25, Salzbaach – L-9559 WILTZ – Tel.: +352 26 81 54 1 - Fax: +352 81 05 17

ARC

LIFTING SYSTEM FOR MOULD UP TO 50 TONS

5:1 4:1 ANTI-CRACK 100%

INDIVIDUAL MADE TO MEASURE UNIT PRODUCTION RFid

ISO 9001 ISO 14001 ISO 27001 MADE IN LUXEMBOURG

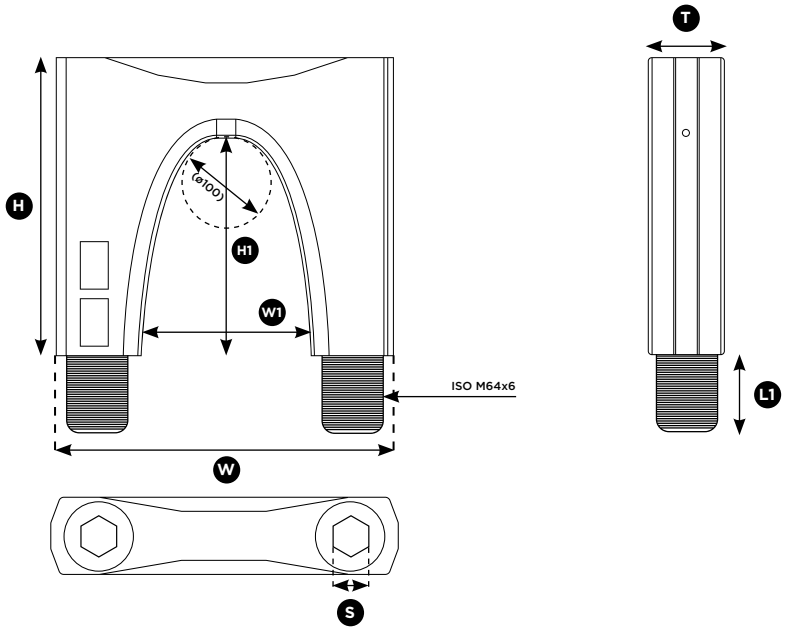

Réf	H (mm)	W (mm)	T (mm)	L1 / ISO M64x6 (mm)	Min drilling hole depth ISO M64x6 / 6H (mm)
ARC 50	315	360	80	85	90

H1 (mm)	W1 (mm)	S (mm)	Torque (Nm)	Weight (kg)	SF 5:1 WLL (t)	SF 4:1 WLL (t)
230	180	36	1000	50	**50,00**	**63,00**

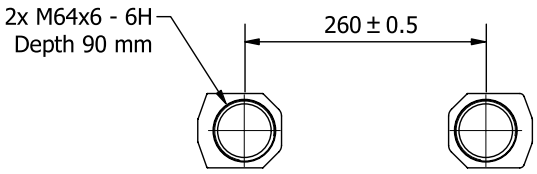

CODIPRO
www.codipro.net - info@codipro.net
25, Salzbaach – L-9559 WILTZ – Tel.: +352 26 81 54 1 - Fax: +352 81 05 17

WE.DSR
WE.DSS

WELD-ON SWIVEL HOIST RING

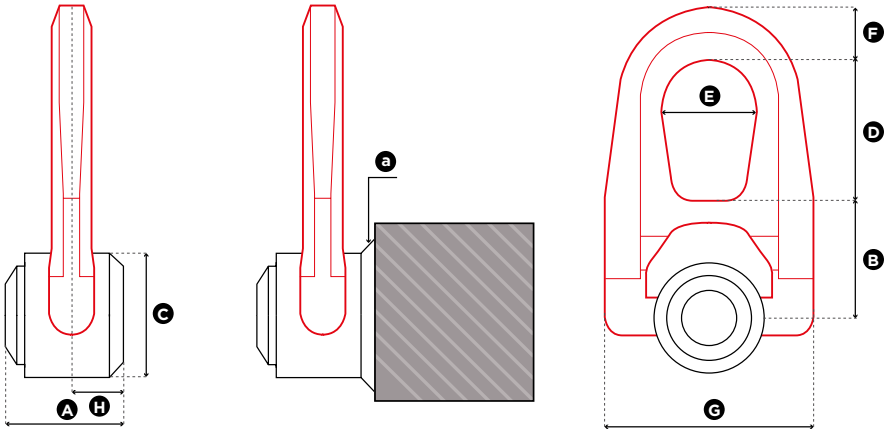

1 in = 25.4 mm

Reference	SF 5:1 WLL (t)	SF 5:1 WLL (lbs)	a (mm)	A (mm)	B (mm)	C (mm)	D (mm)	E (mm)	F (mm)	G (mm)	H (mm)	Weight (kg)
WE.DSR 2	2,00	4,400	5	44	40	45	53	38	17	76	20	0,9
WE.DSR 5	5,00	11,000	6	60	55	60	83	55	25	115	24	2,6

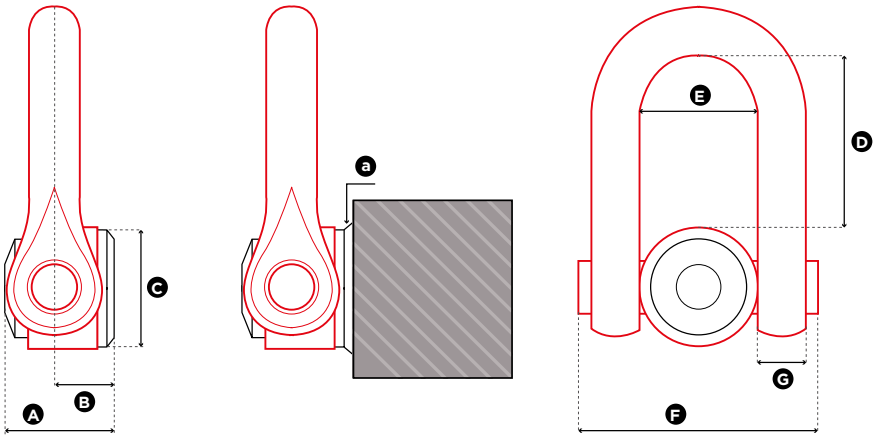

1 in = 25.4 mm

Reference	SF 5:1 WLL (t)	SF 5:1 WLL (lbs)	a (mm)	A (mm)	B (mm)	C (mm)	D (mm)	E (mm)	F (mm)	G (mm)	Weight (kg)
WE.DSS 10	10,00	22,000	7	74	44	70	104	73	149	33	5,5

CODIPRO ALIPA
www.codipro.net - info@codipro.net
25, Salzbaach – L-9559 WILTZ – Tel.: +352 26 81 54 1 - Fax: +352 81 05 17

PE.SEB
SS.PE.SEB

FALL PROTECTION ANCHORAGE POINT

ZN

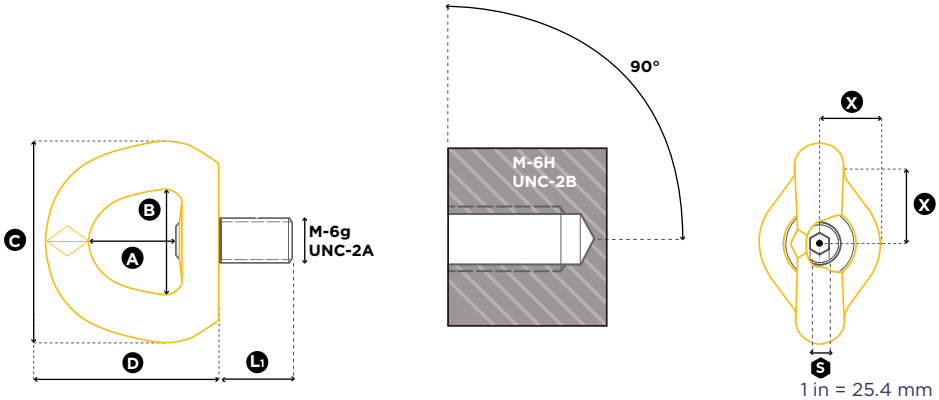

1 in = 25.4 mm

Reference	Diameter	Number of persons		Standard L1 (mm)	Torque (Nm)	X	S (mm)	A (mm)	B (mm)	C (mm)	D (mm)	Weight (kg)
		EN 795:2012	CEN/TS 16415:2013									
PE.SEB M 12	M 12 (x1,75)	1 pers.	2 pers.	21	15	20	6	30	34	60	57	0,24
PE.SEB M 16	M 16 (x2)	1 pers.	2 pers.	27	50	35	8	38	45	88	80	0,80
PE.SEB M 20	M 20 (x2,5)	1 pers.	2 pers.	30	100	35	8	38	45	88	80	0,80

INOX 316 L

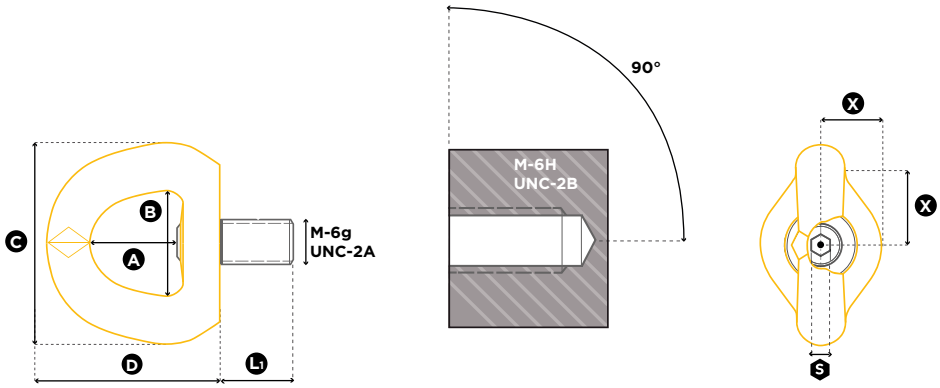

1 in = 25.4 mm

Reference	Diameter	Number of persons		Standard L1 (mm)	Torque (Nm)	X	S (mm)	A (mm)	B (mm)	C (mm)	D (mm)	Weight (kg)
		EN 795:2012	CEN/TS 16415:2013									
SS.PE.SEB M 12	M 12 (x1,75)	1 pers.	2 pers.	21	15	35	8	38	45	90	80	0,80
SS.PE.SEB M 16	M 16 (x2)	1 pers.	2 pers.	27	50	35	8	38	45	90	80	0,82
SS.PE.SEB M 20	M 20 (x2,5)	1 pers.	2 pers.	30	100	35	8	38	45	90	80	0,84
SS.PE.SEB M 24	M 24 (x3)	1 pers.	2 pers.	36	150	35	8	38	45	90	80	0,90

CODIPRO
ALIPA
www.codipro.net - info@codipro.net
25, Salzbaach – L-9559 WILTZ – Tel.: +352 26 81 54 1 - Fax: +352 81 05 17

ADA

THREAD ADAPTOR

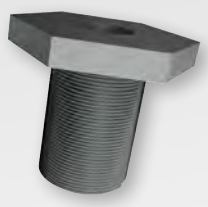

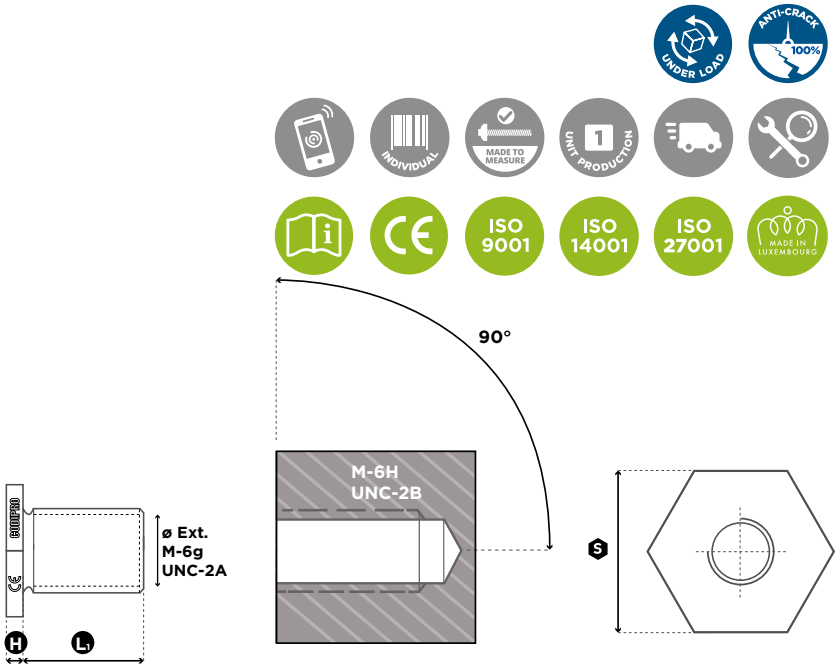

1 in = 25.4 mm

Reference	Ext. Diameter	Max. Int. Diameter		L1 (mm)	Torque (Nm)	S (mm)	H (mm)
		M ISO	UNC				
ADA M 24	M 24 (x3)	18	5/8"	36	160	50	10
ADA M 30	M 30 (x3,5)	20	7/8"	45	250	50	10
ADA M 36	M 36 (x4)	27	1"	54	320	65	10
ADA M 42	M 42 (x4,5)	33	1" 1/4	63	400	75	10
ADA M 48	M 48 (x5)	39	1" 1/2	68	600	75	10
ADA M 56	M 56 (x5,5)	42	1" 3/4	78	600	95	10
ADA M 64	M 64 (x6)	52	2"	90	600	95	10
ADA M 100	M 100 (x6)	80	3" 1/2	100	600	155	15

1 in = 25.4 mm

Reference	Ext. Diameter	Max. Int. Diameter		L1 (mm)	Torque (ft-lb)	S (mm)	H (mm)
		M ISO	UNC				
ADA U 078	UNC 7/8"-9	16	5/8"	33	90	50	10
ADA U 100	UNC 1"-8	18	3/4"	36	125	50	10
ADA U 125	UNC 1"1/4-7	24	7/8"	45	200	50	10
ADA U 138	UNC 1" 3/8-6	27	1"	54	240	65	10
ADA U 150	UNC 1" 1/2-6	30	1" 1/8	61	240	75	10
ADA U 200	UNC 2"-4 1/2	39	1" 1/2	68	450	95	10
ADA U 275	UNC 2" 3/4-4	56	2" 1/4	90	520	155	10
ADA U 400	UNC 4"-4	80	3" 1/4	100	740	155	15

WLL of the adaptor plate = WLL of the CODIPRO lifting ring placed on top. ATTENTION: to be used exclusively with CODIPRO swivel lifting rings. / La CMU de l'adaptateur = CMU de l'anneau CODIPRO fixé. ATTENTION : utiliser uniquement avec des anneaux de levage articulés CODIPRO. / Die Tragfähigkeit des Adapters = Tragfähigkeit der CODIPRO-Ringschraube im angeschraubten Zustand. ACHTUNG: gebrauchen Sie die Teile nur mit drehbaren Ringschrauben der Marke CODIPRO. / La CMU del adaptator = CMU del cáncamo CODIPRO apretado. CUIDADO : utilizar exclusivamente con los cáncamos giratorios de marca CODIPRO.

Other variants available upon request / Autres variantes sur demande / Weitere Varianten auf Anfrage / Otras variantes bajo solicitud

CODIPRO
ALIPA
www.codipro.net - info@codipro.net
25, Salzbaach – L-9559 WILTZ – Tel.: +352 26 81 54 1 - Fax: +352 81 05 17